PERFORMANCE AND SPECIFICATIONS.

GROSS WEIGHT	5200 lbs
SPEED: BEST POWER MIXTURE	
Maximum at Sea Level	237 mph
Maximum Recommended Cruise	
75% Power at 6500 ft.	222 mph
RANGE: NORMAL LEAN MIXTURE	
Maximum Recommended Cruise	
75% Power at 6500 ft.	777 mi
100 Gallons, No Reserve	3.55 hrs
	219 mph
75% Power at 6500 ft.	1010 mi
130 Gallons, No Reserve	4.61 hrs
	219 mph
Maximum Range at 10,000 ft.	
100 Gallons, No Reserve	966 mi
	5.4 hrs
	179 mph
130 Gallons, No Reserve	1255 mi
	7.0 hrs
	179 mph
RATE OF CLIMB AT SEA LEVEL:	
Twin Engine	1540 fpm
Single Engine	330 fpm
SERVICE CEILING:	
Twin Engine	19,900 ft
*Single Engine	6850 ft
TAKEOFF PERFORMANCE: Takeoff Speed 93 MPH	
Ground Run	1451 ft
Total Distance over 50 ft. obstacle	1716 ft
LANDING PERFORMANCE: Approach Speed 105 MPH	
Landing Roll	1002 ft
Total Distance over 50 ft. obstacle	1582 ft
EMPTY WEIGHT (Approximate)	3110 lbs
BAGGAGE ALLOWANCE:	600 lbs
WING LOADING:	29.1 lbs/sq ft
POWER LOADING:	10.0 lbs/hp
FUEL CAPACITY: Total	
Standard	102 gal
Optional Auxiliary Tanks	133 gal
Optional Auxiliary and Wing Locker Tanks	173 gal
OIL CAPACITY: Total	6 gal
POWER: Two Continental 6-Cylinders, Fuel Injection IO-470-V Engines, 260 Rated Horsepower at 2625 rpm	
PROPELLER: Constant Speed, Full Feathering	
Two Bladed, Dia.	81 inches

*Single Engine Service Ceiling increases 425 feet each 30 minutes of flight.

D374-13-RAND-250-2/75

SERVICING REQUIREMENTS

FUEL:

AVIATION GRADE - 100/130 MINIMUM
CAPACITY EACH MAIN TANK - 51 GALLONS
CAPACITY EACH AUXILIARY TANK - 15.5 GALLONS
CAPACITY EACH WING LOCKER TANK -- 20.5 GALLONS

ENGINE OIL:

AVIATION GRADE -- SAE 30 OR SAE 10W30 BELOW 40°F
SAE 50 ABOVE 40°F
(MULTI-VISCOSITY OIL WITH A RANGE OF SAE 10W30 IS RECOMMENDED FOR IMPROVED STARTING IN COLD WEATHER. DETERGENT OR DISPERSANT OIL CONFORMING TO CONTINENTAL MOTORS SPECIFICATION MHS-24A MUST BE USED. THE AIRCRAFT IS DELIVERED FROM THE FACTORY WITH STRAIGHT MINERAL OIL.)

CAPACITY EACH ENGINE SUMP -- 12 QUARTS
(DO NOT OPERATE ON LESS THAN 9 QUARTS, FILL TO 10 QUART LEVEL FOR NORMAL FLIGHTS OF LESS THAN 3 HOURS, AND FILL TO CAPACITY IF EXTENDED FLIGHT IS PLANNED. IF OPTIONAL OIL FILTER IS INSTALLED, ONE ADDITIONAL QUART IS REQUIRED WHEN THE FILTER ELEMENT IS CHANGED.)

OPTIONAL OIL FILTER ELEMENT -- CESSNA C294505-0102

HYDRAULIC FLUID: MIL-H-5606 HYDRAULIC FLUID (RED)

OXYGEN:

AVIATOR'S BREATHING OXYGEN -- MIL-O-27210
MAXIMUM PRESSURE -- 1800 PSI

TIRE PRESSURE:

MAIN WHEELS -- 60 PSI
NOSE WHEEL -- 24 PSI

VACUUM AIR FILTER:

ELEMENT -- C294501-0103

Northwest Aviation Maintenance, Inc.
1705 East Main Street -- Griffith, IN 46319
219-922-2632 (voice) 219-922-6419 (fax)

MINOR ALTERATION AND/OR WEIGHT & BALANCE CHANGE

Model: CESSNA 310K Serial Number: 310K0117

Aircraft Regsistration: N7017L

Last Recorded Weight & Balance Dated: 8/9/1984 Aircraft Gross Weight 5,200.00

	WEIGHT	ARM	MOMENT
Superceded Data:	3434.7	36.99	127043.75

Changes: WEIGHED AIRCRAFT

NOSE WHEEL	754.00	-61.00	-45994.00
LEFT MAIN	1841.00	55.00	101255.00
RIGHT MAIN	1784.00	55.00	98120.00
SUBTOTAL	4379.00	35.03	153381.00
LESS MAIN FUEL	-600.00	35.00	-21000.00
LESS AUX FUEL	-180.00	47.00	-8460.00
Totals:	3599.00	34.43	123921.00

New Empty Weight 3599.00 New Moment: 123921.00

New Empty Weight Center of Gravity: 34.43 New Useful Load: 1,601.00

The above equipment was installed per manufacturers installation manuals and AC.43.13, in accordance with Aviation Regulation Part 43, and is approved for return to service as per those requirements. The new center of gravity falls with in the limits as specified in the flight manual. WIth respect to work performed; pertinent details of the alternation and/or change are on file under Work Order No.-------N/A-------

Date: March 20, 2012 Signed: ROBERT L. AHLF AP3741505

THERE ARE MORE CESSNAS FLYING THAN ANY OTHER

ACROSS NATIONS Cessna AROUND THE WORLD

Cessna SALES AND SERVICE

"TAKE YOUR CESSNA HOME FOR SERVICE AT THE SIGN OF THE CESSNA SHIELD"

CESSNA 1966

MODEL 310K

7017L

CESSNA AIRCRAFT COMPANY

WICHITA, KANSAS

OWNER'S MANUAL

This manual describes your new airplane. The most current copy can be obtained from the factory one of your cross-country welcome awaits you at every Cessna Dealer.

WORLD'S LARGEST PRODUCER

...ND ...CIFICATIONS.

...S WEIGHT	5200 lbs
...D: BEST POWER MIXTURE	
...aximum at Sea Level	237 mph
...aximum Recommended Cruise 75% Power at 6500 ft.	222 mph
...GE: NORMAL LEAN MIXTURE	
...aximum Recommended Cruise 75% Power at 6500 ft.	777 mi
100 Gallons, No Reserve	3.55 hrs
	219 mph
75% Power at 6500 ft.	1010 mi
130 Gallons, No Reserve	4.61 hrs
	219 mph
...aximum Range at 10,000 ft. 100 Gallons, No Reserve	966 mi
	5.4 hrs
	179 mph
130 Gallons, No Reserve	1255 mi
	7.0 hrs
	179 mph
...E OF CLIMB AT SEA LEVEL:	
...win Engine	1540 fpm
...ngle Engine	330 fpm
...VICE CEILING:	
...win Engine	19,900 ft
...ingle Engine	6850 ft
...KEOFF PERFORMANCE: ...off Speed 93 MPH	
...Ground Run	1451 ft
...Total Distance over 50 ft. obstacle	1716 ft
...NDING PERFORMANCE: Approach Speed 105 MPH	
Landing Roll	1002 ft
Total Distance over 50 ft. obstacle	1582 ft
...PTY WEIGHT (Approximate)	3110 lbs
...GGAGE ALLOWANCE:	600 lbs
...NG LOADING:	29.1 lbs/sq ft
...WER LOADING:	10.0 lbs/hp
...EL CAPACITY: Total	102 gal
Standard	133 gal
Optional Auxiliary Tanks	6 gal
...CAPACITY: Total	
...ntinental 6-Cylinders, Fuel Injection ...Rated Horsepower at 2625 rpm ...Full Feathering	81 inches

...feet each 30 minutes of flight.

CONGRATULATIONS.....

Welcome to the ranks of Cessna owners! Your Cessna has been designed and constructed to give you the most in performance, economy, and comfort. It is our desire that you will find flying it, either for business or pleasure, a pleasant and profitable experience.

This Owner's Manual has been prepared as a guide to help you get the most pleasure and utility from your Model 310. It contains informatic about your Cessna's equipment, operating procedures, and performar and suggestions for its servicing and care. We urge you to read it fr over to cover, and to refer to it frequently.

Our interest in your flying pleasure has not ceased with your purchase a Cessna. World-wide, the Cessna Dealer Organization, backed up by Cessna Service Department, stands ready to serve you. The following services are offered by most Cessna Dealers:

FACTORY TRAINED PERSONNEL to provide you with courteous expert service.

FACTORY APPROVED SERVICE EQUIPMENT to provide you with the most efficient and accurate workmanship possible.

A STOCK OF GENUINE CESSNA SERVICE PARTS on hand when you need them.

THE LATEST AUTHORITATIVE INFORMATION FOR SERVICING CESSNA AIRPLANES, since Cessna Dealers have all of the Service Manuals and Parts Catalogs, kept current by Service Letters and Service News Letters published by Cessna Aircraft Company.

We urge all Cessna owners to use the Cessna Dealer Organization to the fullest.

A current Cessna Dealer Directory accompanies your new airplane. The Directory is revised frequently, and a current copy can be obtained from your Cessna Dealer. Make your Directory one of your cross-country flight planning aids; a warm welcome awaits you at every Cessna Dealer.

...CKLIST

...rvice, with ...t be done items on II.

...to oper- points ...pical

...normal ...entire ...indi- from

...1-1.

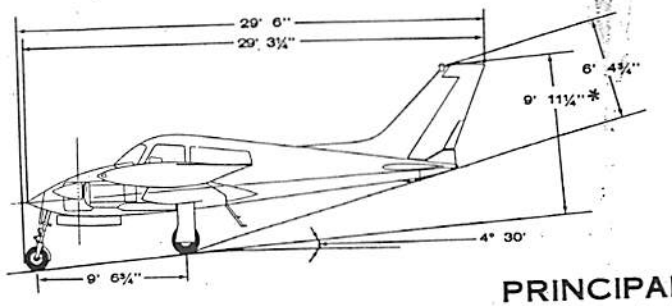

PRINCIPAL DIMENSIONS

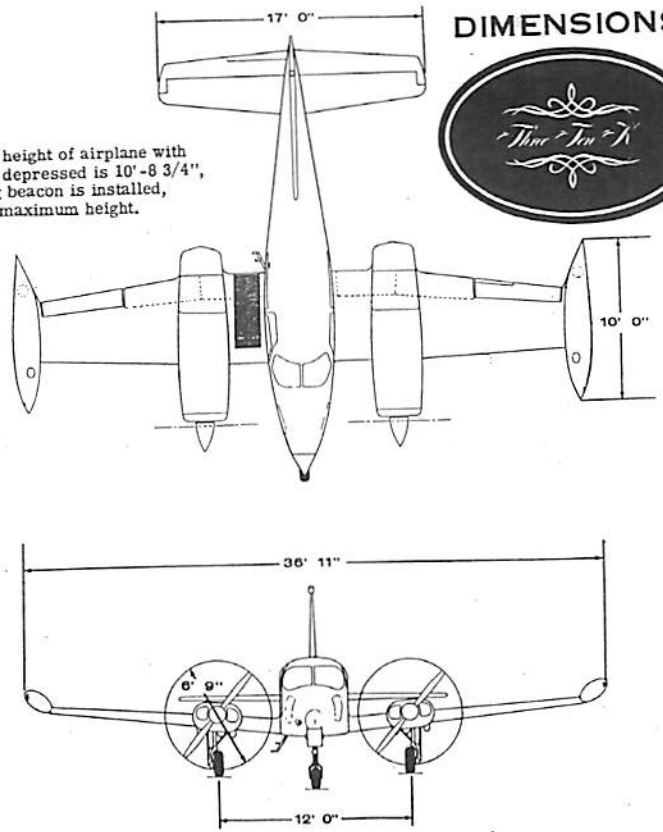

*Maximum height of airplane with nose gear depressed is 10'-8 3/4", if rotating beacon is installed, add 3" to maximum height.

TABLE OF CONTENTS

		Page
SECTION I	- OPERATING CHECKLIST	1-1
SECTION II	- DESCRIPTION AND OPERATING DETAILS	2-1
SECTION III	- EMERGENCY PROCEDURES	3-1
SECTION IV	- OPERATING LIMITATIONS	4-1
SECTION V	- CARE OF THE AIRPLANE	5-1
	OWNER FOLLOW-UP SYSTEM	5-4
SECTION VI	- OPERATIONAL DATA	6-1
SECTION VII	- OPTIONAL SYSTEMS	7-1
ALPHABETICAL INDEX		Index - 1

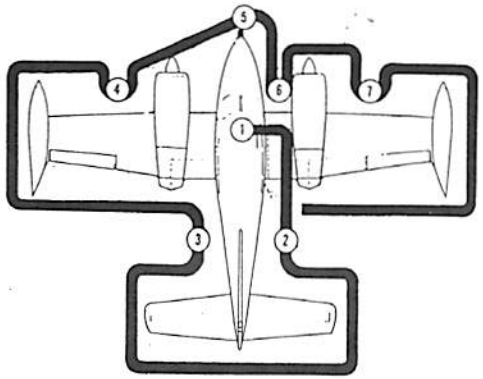

EXTERIOR INSPECTION

NOTE

Check general aircraft condition during walk-around inspection. If night flight is planned, check operation of all lights; make sure a flashlight is available.

1. a. Turn on battery switch. Check fuel quantity gages, check operation of stall warning transmitter tab and horn by raising tab on left wing, and check main tank transfer pumps for operation (listen for audible clicking emanating from main tanks). Turn battery switch OFF.
   b. Check landing gear switch DOWN.
   c. Check magneto switches OFF.
   d. Check left fuel selector in LEFT MAIN position and right fuel selector in RIGHT MAIN position (feel for detent).
   e. Check oxygen knob - PULL ON.
   f. Check oxygen pressure.
   g. Remove control lock.

2. a. Open baggage door and check that oxygen masks and hoses are available.
   b. Close baggage door and check for security.
   c. Check static pressure source holes for obstruction (both sides of fuselage).
   d. Remove control surface locks, if installed.
   e. Remove tie-down.

3. a. Check wing locker door for security.
   b. On first flight of the day and after each refueling, drain small amount of fuel from quick-drain valve in the wing locker fuel tank, if installed.
   c. Remove control surface lock, if installed.
   d. Check sniffle valve opening for obstruction.
   e. Check main fuel tank vent for obstructions (especially water and ice accumulation in the tank vent shield during cold weather operation).
   f. Check main fuel tank cap for security.
   g. On first flight of the day and after each refueling, drain small amount of fuel from quick-drain valve in the main tank.
   h. Check auxiliary fuel tank cap for security.
   i. Check wing locker fuel tank vent for obstructions, if installed.
   j. Check wing locker fuel tank cap for security, if installed.
   k. On first flight of the day and after each refueling, drain small amount of fuel from quick-drain valve in the auxiliary tank and wing locker fuel transfer line, if installed.
   l. Check battery drain and battery compartment cover panel for security (left side only).
   m. Remove wing tie-down.

4. a. Check oil level. (Do not operate on less than 9 quarts. Fill to 10 quart level for flights of less than 3 hours. Fill to capacity for extended flights.) Check dip stick for security and engine compartment for general condition.
   b. Check oil filler cap for security through oil filler access door.
   c. Check main landing gear strut and tire inflation. Check gear doors for security.
   d. On first flight of day and after each refueling, drain about two ounces of fuel from fuel strainer to clear of any water and sediment.
   e. Check propeller and spinner for nicks, cracks and security and propeller for oil leaks.
   f. Check cowl access doors for security.

5. a. Check left nose access panel for security.
   b. Check nose gear strut and tire inflation; check nose gear doors for security.
   c. Remove tie-down, if installed.
   d. Check right nose access panel for security.
   e. Remove pitot tube cover, if installed, and check pitot tube opening for obstructions.
   f. Check heater inlet for obstructions.

6. a. Same as 4.

7. a. Same as 3 except in reverse order.

Figure 1-1.

SECTION I
OPERATING CHECKLIST

One of the first steps in obtaining the utmost performance, service, and flying enjoyment from your Cessna is to familiarize yourself with your airplane's equipment, systems, and controls. This can best be done by reviewing this equipment while sitting in the airplane. Those items whose function and operation are not obvious are covered in Section II.

Section I lists, in Pilot's Checklist form, the steps necessary to operate your airplane efficiently and safely. It covers briefly all the points that you should know concerning the information you need for a typical flight.

The flight and operational characteristics of your airplane are normal in all respects. All controls respond in the normal way within the entire range of operation. All airspeeds mentioned in Sections I and II are indicated airspeeds. Corresponding calibrated speeds may be obtained from the Airspeed Correction Table, Figure 6-1.

MAKE AN EXTERIOR INSPECTION IN ACCORDANCE WITH FIGURE 1-1.

BEFORE STARTING THE ENGINES.

(1) Seats and Safety Belts -- Adjust and lock.
(2) Brakes -- Test and set.
(3) Landing Gear Switch -- Check DOWN.
(4) Alternate Air Controls -- Check in.
(5) Battery Switch -- ON.

NOTE

When using an external power source, do not turn on the battery switch until external power is disconnected, to avoid a weak battery draining off part of the current being supplied by the external source.

(6) Generator Switches -- ON.
(7) Landing Gear Lights -- Press to test (check iris - open).

(8) Fuel Selectors - Left Engine -- LEFT MAIN (feel for detent).
Right Engine -- RIGHT MAIN (feel for detent).
(9) Trim Controls -- Set.
(10) Altimeter and Clock -- Set.
(11) Turn All Radio Switches -- OFF.

STARTING ENGINES (Left Engine First).

(1) Throttle -- Open 1 inch.
(2) Propeller -- High RPM.
(3) Mixture -- Full Rich.
(4) Magneto Switches -- ON.
(5) Start Engine.
(a) Starter Button -- Press.
(b) Primer Switch - Left Engine -- LEFT.
Right Engine -- RIGHT.

NOTE

- If the primer switch is actuated longer than two or three seconds with the engines inoperative on the ground, damage may be incurred to the engine and/or airplane due to excessive fuel accumulation.
- During very hot weather, caution should be exercised to prevent overpriming the engines. If there is an indication of vapor in the fuel system (fluctuating fuel flow) with engines running, place the auxiliary fuel pump switch to the LOW position until the system is purged.

(6) Auxiliary Fuel Pumps -- LOW.

BEFORE TAKEOFF.

(1) Throttle Settings -- 1700 RPM.
(2) Generators -- Check.
(3) Magnetos -- Check (50 RPM maximum differential between magnetos).
(4) Propellers -- Check feathering to 1200 RPM; return to high RPM (full forward position).
(5) Vacuum Source -- Check source and suction (4.75 to 5.25 inches of mercury).
(6) Oil Temperature -- Check green arc.
(7) Trim Controls -- Check.
(8) Alternate Air Controls -- Check in.

(9) Wing Flaps -- 0°.
(10) Flight Controls -- Check (free and correct).
(11) Cabin Door and Windows -- Closed and locked.
(12) Flight Instruments and Radios -- Set.
(13) Engine Instruments -- Check.

TAKEOFF.

NORMAL TAKEOFF.

(1) Auxiliary Fuel Pumps -- ON.
(2) Power -- Full throttle and 2625 RPM.

NOTE

Apply full throttle smoothly to avoid propeller surging.

(3) Mixtures -- Lean for field elevation.

NOTE

Leaning during the takeoff roll is normally not necessary; however, should maximum takeoff or subsequent engine-out performance be desired, fuel flow should be adjusted to match field elevation.

(4) Maintain Level Attitude.
(5) Elevator Control -- Raise nose wheel at 90 MPH.
(6) Break Ground at 105 MPH.
(7) Brakes -- Apply momentarily.
(8) Landing Gear -- Retract.
(9) Climb Speed -- 124 MPH (best twin-engine rate-of-climb speed) (Set up climb speed as shown in "NORMAL CLIMB" paragraph.)
(10) Auxiliary Fuel Pumps -- OFF.

MAXIMUM PERFORMANCE TAKEOFF.

(1) Auxiliary Fuel Pumps -- ON.
(2) Wing Flaps -- 15°.
(3) Power -- Full throttle and 2625 RPM.
(4) Maintain Level Attitude.
(5) Elevator Control -- Lift nose wheel at 84 MPH.
(6) Break Ground at 93 MPH -- Hold speed until obstacles are cleared

(7) Brakes -- Apply momentarily.
(8) Landing Gear -- Retract.
(9) Flaps -- Retract (after obstacles are cleared).
(10) Auxiliary Fuel Pumps -- OFF.

CLIMB.

NORMAL CLIMB.

(1) Airspeed -- 130-150 MPH.
(2) Power -- 24 inches Hg. and 2450 RPM.
(3) Mixtures -- Adjust to climb fuel flow.
(4) Auxiliary Fuel Pumps -- ON (above 12,000 feet altitude to minimize vapor formation).

NOTE

During very hot weather if there is an indication of vapor in the fuel system (fluctuating fuel flow) or anytime when climbing above 12,000 feet, turn the auxiliary fuel pumps ON until cruising altitude has been obtained and the system is purged (usually 5 to 15 minutes after establishing cruising flight).

MAXIMUM PERFORMANCE CLIMB.

(1) Airspeed -- 124 MPH at sea level; 122 MPH at 10,000 feet.
(2) Power -- Full throttle and 2625 RPM.
(3) Mixtures -- Adjust for altitude and power.
(4) Auxiliary Fuel Pumps -- ON (above 12,000 feet altitude to minimize vapor formation).

NOTE

During very hot weather, if there is an indication of vapor in the fuel system (fluctuating fuel flow) or anytime when climbing above 12,000 feet, turn the auxiliary fuel pumps ON until cruising altitude has been obtained and the system is purged (usually 5 to 15 minutes after establishing cruising flight). It is recommended that the mixture remain at the climb mixture setting for approximately 5 minutes after establishing cruising flight before leaning is initiated.

CRUISING.

(1) Cruise Power -- 15-24 inches Hg. and 2100-2450 RPM.
(2) Mixtures -- Lean for desired cruise fuel flow as determined from your Cessna Model 310 Power Computer.
(3) Fuel Selectors - MAIN TANKS for first 60 minutes. After 60 minutes of flight, if auxiliary fuel tanks are installed, fuel selectors may then be placed in AUXILIARY position, and feel for detent.
   (a) If wing locker tanks are installed, fuel selectors - MAIN TANKS or, after wing locker tanks are transferred and main tank quantity is less than 30 gallons each - AUXILIARY TANKS.

NOTE

Turn auxiliary fuel pumps to LOW and mixtures to FULL RICH when switching tanks.

(4) Trim Tabs -- Adjust.
(5) If wing locker tanks are installed, Crossfeed -- SELECT as required to maintain fuel balance after wing locker tank fuel transfer.

LETDOWN.

(1) Power -- As required.
(2) Mixtures -- Adjust for smooth operation with gradual enrichment as altitude is lost.

BEFORE LANDING.

(1) Fuel Selectors - Left Engine -- LEFT MAIN (feel for detent).
   Right Engine -- RIGHT MAIN (feel for detent).
(2) Alternate Air Controls -- Check in.
(3) Mixtures -- Full Rich or lean as required for smooth operation.
(4) Propellers -- High RPM.
(5) Wing Flaps -- 15° below 180 MPH; 15° to 35° below 140 MPH.
(6) Landing Gear -- Extend below 140 MPH.
(7) Landing Gear Position Indicator Lights -- Check green lights on.
(8) Auxiliary Fuel Pumps -- ON.
(9) Approach -- 105 MPH.

LANDING.

(1) Touchdown -- Main wheels first.
(2) Landing Roll -- Lower nose wheel gently.
(3) Braking -- As required.

AFTER LANDING.

(1) Auxiliary Fuel Pumps -- LOW.
(2) Wing Flaps -- Retract.

SECURE AIRPLANE.

(1) Auxiliary Fuel Pumps -- OFF.
(2) Mixtures -- IDLE CUT-OFF.
(3) Magneto Switches -- OFF, after engines stop.
(4) All Switches -- OFF.
(5) Brakes -- Set.
(6) Control Lock -- Install.
(7) Cabin Door -- Close and rotate exterior door handle clockwise to latch cabin door.

NOTE

To securely latch the cabin door from the outside, the exterior door handle must be rotated clockwise to its stop.

SECTION II
DESCRIPTION AND OPERATING DETAILS

The following paragraphs supply a general description of some systems and equipment in the airplane. This section also covers, in somewhat greater detail, some of the items listed in Checklist form in Section I. Only those items of the Checklist requiring further explanation will be covered here.

FUEL SYSTEM.

Fuel for each engine is supplied by a main tank (50 gallons useable) on each wing tip. Each engine has its own complete fuel system; two systems are interconnected only by a cross feed for emergency use. Vapor and excess fuel from the engines are returned to the main fuel tanks. Submerged electric auxiliary pumps in the main fuel tanks supply fuel for priming and starting, and for engine operation as a backup system to the engine-driven pumps. Refer to Figure 2-1 for fuel system schematic.

A continuous duty tip tank transfer pump is installed in each main tank. The pumps assure availability of all tip tank fuel to the engine supply line during high angles of descent. Each pump is electrically protected by the respective landing light circuit breaker. When the right-hand landing light is not installed, a circuit breaker is installed to protect the right-hand transfer pump. During preflight inspection these pumps can be checked for operation by listening for a pulsing sound emanating from the aft tip tank fairings with the battery switch in the ON position.

AUXILIARY FUEL PUMP SWITCHES.

The LOW position runs the pumps at low speed, providing 6 gallons per hour pressure for purging. The ON position also runs the pumps at low speed, as long as the engine-driven pumps are functioning. With the switch positioned to ON, however, if an engine-driven pump should fail, the auxiliary pump on that side will switch to high speed automatically, providing sufficient fuel for all engine operations including emergency takeoff. The auxiliary fuel pump will not run unless the engine oil pressure on that side is at least 20 PSI.

FUEL STRAINER AND TANK SUMP DRAINS.

Refer to Servicing Procedures -- Page 5-6.

ELECTRICAL SYSTEM.

Electrical energy is supplied by a 28-volt, negative-ground, direct-current system powered by a 25-ampere engine-driven generator on each

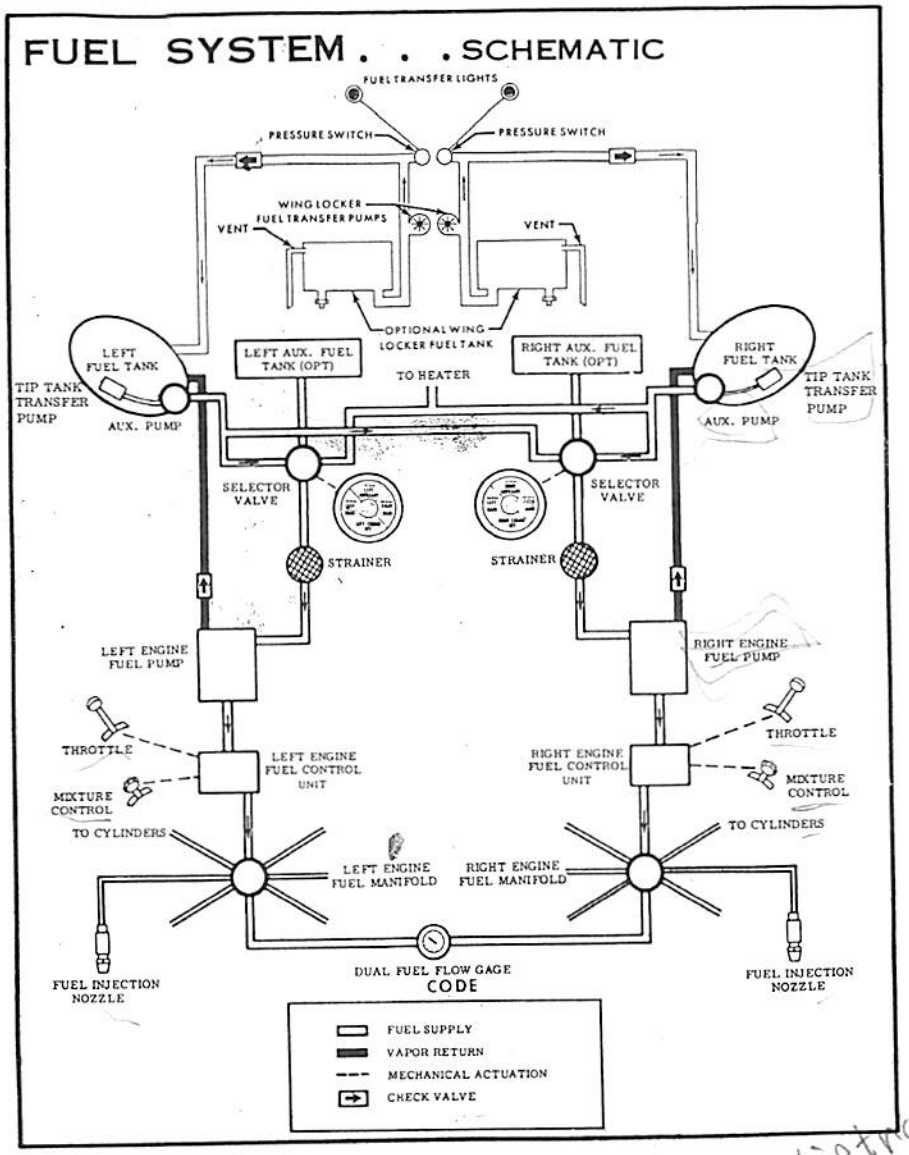

Figure 2-1.

engine. Two 12-volt batteries, connected in series, are located in the left wing just outboard of the engine nacelle. An optional external power receptacle may be installed in the left wing under the batteries. The receptacle will accept a standard external power source plug.

BATTERY AND GENERATOR SWITCHES.

Separate battery and generator switches provide a means of checking for a malfunctioning generator circuit, and permit such a circuit to be cut off. If a generator circuit fails or malfunctions, or when one engine is not running, the switch for that generator should be turned off. Operation should be continued on the functioning generator, using only necessary electrical equipment. If both generator circuits should malfunction, equipment can be operated at short intervals and for a limited amount of time on the battery alone. In either case, a landing should be made as soon as possible to check and repair the circuits.

CIRCUIT BREAKERS.

All electrical circuits in the airplane are protected by push-to-reset type circuit breakers. Should an overload occur in any circuit, the resulting heat rise will cause the controlling circuit breaker to open the circuit. After allowing the circuit breaker to cool for approximately three minutes it may be pushed (until a click is heard or felt) to re-energize the circuit. However, the circuit breaker should not be held in if it opens the circuit a second time, as this indicates a short circuit.

LANDING GEAR SYSTEM.

The electrically operated landing gear is fully-retractable and incorporates a steerable nosewheel. To help prevent accidental retraction, an automatic safety switch on the LEFT shock strut prevents retraction as long as the weight of the airplane is sufficient to compress the strut. The landing gear is operated by a switch, which is identified by a wheel-shape knob. The switch positions are UP, OFF, and DOWN. To operate the gear, pull out on the switch knob and move to desired position.

LANDING GEAR POSITION LIGHTS.

Four landing gear position lights are provided, one above and three below, the landing gear switch. The upper light is amber and will illuminate at all times when the landing gear is fully retracted. The three lower lights (one for each gear) are green and will illuminate when each gear is fully extended and locked. When the gear up light and gear down lights are not illuminated, the landing gear is in an intermediate position. The lights are push-to-test type with rotatable dimming shutters.

LANDING GEAR WARNING HORN.

The landing gear warning horn is controlled by the throttles, and will sound an intermittent note if either throttle is retarded below approximately 12 inches Hg. manifold pressure with the gear up. The warning horn is also connected to the UP position of the landing gear switch, and will sound if the switch is placed in the UP position while the airplane is on the ground.

LANDING GEAR HANDCRANK.

A handcrank for manually lowering the landing gear is located just below the right front edge of the pilot's seat.

NOTE

The handcrank handle must be stowed in its clip before the landing gear will operate electrically. When the handle is placed in operating position, it disengages the landing gear motor from the actuator gear.

The procedure for manually lowering the landing gear is given in Section III.

HEATER SYSTEM.

HEATER OPERATION FOR HEATING AND DEFROSTING.

(1) Battery Switch -- ON.
(2) Cabin Air Knobs -- OPEN.
(3) Defrost Knob -- Adjust as desired (if defrosting is desired).
(4) Temperature Control Knob -- MAX.
(5) Cabin Heat Switch -- HEAT.
(6) Temperature Control and Heat Registers -- As desired.

NOTE

If warm air is not felt coming out of the registers within one minute, return cabin heat switch to OFF, check circuit breaker and try another start. If heater still does not start, no further starting attempt should be made.

HEATER USED FOR VENTILATION.

(1) Battery Switch -- ON.
(2) Cabin Air Knobs -- OPEN.
(3) Cabin Heat Switch -- FAN.
(4) Heat Registers -- As desired.

OVERHEAT WARNING LIGHT.

An amber overheat warning light is provided and is labeled HEATER-OVERHEAT, T & B TEST. When illuminated, the light indicates that the heater overheat switch has been actuated and indicates the temperature of the air in the heater exceeds 325°F. Once the heater overheat switch has been actuated, the heater turns off and cannot be restarted until the overheat switch is reset. Prior to having the overheat switch reset, the heater should be inspected thoroughly to determine the reason for the malfunction.

STATIC- PRESSURE ALTERNATE-SOURCE VALVE.

A static-pressure alternate-source valve, installed in the static system directly below the parking brake handle, supplies an alternate static source should the external source malfunction. This valve also permits draining condensate from the static lines. When open, this valve vents to the static pressure in the cabin and since this is relatively low, the airspeed indicator and the altimeter will show slightly higher readings than normal. Therefore, the alternate static source should be used primarily as a drain valve to restore the original system.

If the alternate static source must be used for instrument operation, compensation should be made in the indicated airspeeds and altitudes. In landing with the alternate source valve open and the pilot's storm window closed, fly at an indicated airspeed 10 MPH faster and an altitude 30 feet higher than normal. With the static source valve open and the pilot's storm window open, make these allowances, 26 MPH and 160 feet.

PITOT HEAT SWITCH.

When the pitot heat switch is placed in the ON position, the heating elements in the pitot tube, stall warning transmitter and main fuel tank vents are electrically heated to maintain proper operation of the system during icing conditions. The switch should always be in the OFF position while on the ground to prevent overheating of the heating elements.

STARTING ENGINES.

The left engine is normally started first because the cable from the battery to this engine is much shorter permitting more electrical power to be delivered to the starter. If batteries are low, the left engine should start more readily.

When using an external power source, it is recommended to start the airplane with the battery switch OFF.

The continuous flow fuel injection system will start spraying fuel in the engine intake ports as soon as the primer switch is pressed on and the throttle and mixture controls are opened. To avoid flooding, begin cranking the engine prior to priming the engine.

In hot weather with a hot engine, a fluctuating fuel flow slightly lower than normal may be obtained. This is an indication of vaporized fuel and the starter should not be energized until a steady fuel flow indication is obtained.

NOTE

Caution should be exercised to prevent overpriming the engine in hot weather.

Engine misfire starts characterized by weak, intermittent explosions followed by puffs of black smoke from the exhaust are the result of flooding or overpriming. This situation is more apt to develop in hot weather, or when the engines are hot. If it occurs, repeat the starting procedure with the throttle open approximately 1/2, the mixture in idle cut-off and the primer switch off. As the engine fires, move the mixture control to full rich and close the throttle to idle.

If an engine is under primed, as may occur in cold weather with a cold engine, repeat the starting procedure after holding the primer switch on for 10 to 15 seconds until the engine fires.

If cranking longer than 30 seconds is required, allow starter motor to cool for five minutes before cranking again, since excessive heat may damage the armature windings.

TAXIING.

A steerable nosewheel interconnected with the rudder system provides positive control up to 15° left or right, and free turning from 15° to 55°

for sharp turns during taxiing. Steering may be aided thru use of differential power and differential braking on the main wheels. These aids are listed in the preferred order of use.

BEFORE TAKEOFF (Use The Pilot's Checklist).

Full throttle checks on the ground are not recommended unless there is good reason to suspect that the engines are not turning-up properly. Do not run-up the engines over loose gravel or cinders because of possible stone damage or abrasion to the propeller tips.

If the ignition system check produces an engine speed drop in excess of 125 RPM or if the drop in RPM between left and right magneto differs by more than 50 RPM, continue warm-up a minute or two longer, before rechecking system. If there is doubt concerning operation of the ignition system, checks at higher engine speed will usually confirm if a deficiency exists.

TAKEOFF.

Observe full-power engine operation early in the takeoff run. Signs of rough engine operation, unequal power between engines, or sluggish engine acceleration are good cause for discontinuing the takeoff.

For maximum engine power, the mixture should be adjusted during the initial acceleration for smooth engine operation at the field elevation. The engine acceleration is increased significantly with fuel leaning above 3000 feet and this procedure always should be employed for field elevations greater than 5000 feet above sea level.

Full throttle operation is recommended on takeoff since it is important that a speed well above minimum single-engine control speed (87 MPH) be reached as rapidly as possible.

After takeoff it is important to maintain the recommended safe single-engine speed (105 MPH). After obstruction height is reached, and gear retracted, power may be reduced and climb speeds may be established as described in Section I.

On long runways, the landing gear should be retracted at the point over the runway where a wheels-down forced landing on that runway would be-

come impractical. However, on short runways, it is preferable to retract the landing gear after the airplane is safely airborne.

Performance data for both normal and obstacle clearance takeoff is presented in Section VI.

CLIMB.

To save time and fuel for the over-all trip, it is recommended that the normal cruising climb be conducted at 130 to 150 MPH using approximately 75% power (24 inches Hg. manifold pressure, 2450 RPM).

The mixture should be leaned in this type of climb to give the desired fuel flow in the climb dial range which is approximately best power mixture.

If it is necessary to climb rapidly to clear mountains or reach favorable winds at high altitudes, the best rate-of-climb speed should be used with maximum power. This speed varies from 124 MPH at sea level to 122 MPH at 10,000 feet. During maximum performance climbs, the mixture should be leaned to the appropriate altitude markings on the fuel flow gage. It is recommended that the auxiliary fuel pumps be on at altitudes above 12,000 feet for the duration of the climb and approximately 5 to 15 minutes after establishing cruising flight. It is also recommended that the mixture remain at the climb mixture setting for approximately 5 minutes after establishing cruising flight before leaning is initiated. These procedures will eliminate fuel vaporization problems likely to occur from rapid altitude changes.

If an obstruction ahead requires a steep climb angle, the airplane should be flown at the best angle-of-climb speed with flaps up and maximum power. This speed varies from 97 MPH at sea level to 112 MPH at 15,000 feet.

CRUISE.

Tabulated cruising information for normal cruising power and altitudes is presented in Section VI.

Normal cruising requires between 60% and 70% power. The manifold pressure and RPM settings required to obtain these powers at various altitudes and outside air temperature can be determined with your Cessna Model 310 Power Computer. The maximum cruising power of approximately 75% (24 inches Hg. manifold pressure, 2450 RPM) may be used if desired.

Various percent powers can be obtained with a number of combinations of manifold pressures, engine speeds, altitudes, and outside air temperatures. However, at full throttle and constant engine speed, a specific power can be obtained at only one altitude for each given air temperature.

To achieve the level flight performance shown in the cruising charts in Section VI, lean the mixtures to give the fuel flows shown. This will yield airspeeds slightly below (approximately one to two MPH) those available at best power mixture.

Should maximum speed be desirable, the mixture should be adjusted to approximately one gph higher than that indicated by the range charts or the Cessna Model 310 Power Computer. This will yield approximately best power mixture with a resulting airspeed of one to two MPH greater and a fuel flow approximately one gallon per hour greater than those listed in Section VI.

For a given throttle setting, select the lowest engine speed in the green arc range that will give smooth engine operation without evidence of laboring.

For best propeller synchronization, the final adjustment of the propeller pitch levers should be made in a DECREASE RPM direction.

ALTERNATE INDUCTION AIR SYSTEM.

The induction air system on these engines is considered to be non-icing. However, manually operated alternate induction air is provided to assure satisfactory operation should the induction air filter become obstructed with ice. Should a decrease in manifold pressure be experienced when flying in icing conditions, the alternate air doors should be manually opened. This will provide continued satisfactory engine operation.

Since the higher intake air temperature when using alternate intake air results in a decrease in engine power, it is recommended that the alternate intake air not be utilized until indications of intake filter icing are actually observed.

Should additional power be required, the following procedure should be employed:

(1) Push propeller levers full forward for 2625 RPM. This will in-

sure that the maximum power available is being used.

(2) Move throttles forward until maximum manifold pressure is reached.

(3) Readjust mixture control for smooth engine operation.

STALL.

The stall characteristics of this airplane are conventional and aural warnings are provided by the stall warning horn between 5 and 10 MPH above the stall in all configurations. The stall is also preceded by a mild aerodynamic buffet which increases in intensity as the stall is approached. The power-on stall occurs at a very steep angle either with or without flaps, and it is difficult to inadvertently stall the airplane during normal maneuvering.

Power-off stall speeds at maximum gross weight are presented in Figure 6-2 as both indicated and calibrated airspeeds.

SPINS.

Intentional spins are not permitted in this airplane. Should a spin occur, however, the following recovery procedure should be employed:

(1) Cut power on both engines.

(2) Apply full rudder opposing the direction of rotation.

(3) Approximately 1/2 turn after applying rudder, push control wheel forward briskly.

(4) To expedite recovery, add power to the engine toward the inside of the direction of turn.

(5) Pull out of dive with smooth, steady control pressure.

COLD WEATHER OPERATION.

Whenever possible, external preheat should be utilized in cold weather. The use of preheat materially reduces the severity of conditions imposed on both the engines and electrical systems. It is the preferred or best method of starting engines in extremely cold weather. Preheat will thaw the oil trapped in the oil coolers and optional oil filters which will probably be congealed prior to starting in very cold weather.

If preheat is not available, external power should be used for starting because of the higher cranking power required, and the decreased battery output at low temperatures. The starting procedure is normal, however,

if the engines do not start immediately it may be necessary to position the primer switch to LEFT or RIGHT for 10 to 15 seconds.

After a suitable warm-up period (2 to 5 minutes at 1000 RPM if preheat is not used) accelerate the engines several times to a higher RPM. The propellers should be operated through several complete cycles to warm the governors and propeller hubs. If the engines accelerate smoothly, the oil pressure remains normal and steady, the airplane is ready for takeoff.

During cruise the propellers should be exercised at half-hour intervals to flush the cold oil from the governors and propeller hubs. Electrical equipment should be managed to assure adequate generator charging throughout the flight, since cold weather adversely affects battery capacity.

During let down, watch engine temperatures closely and carry sufficient power to maintain them above operating minimums.

The pitot, tip tank vents, and stall warning heater switch should be turned ON at least 5 minutes before entering a potential icing condition so that these units will be warm enough to prevent formation of ice. Preventing ice is preferable to attempting its removal once it has formed.

Refer to Section VII for Optional Cold Weather Equipment.

Notes .....

ENGINE-OUT PROCEDURES.

ENGINE-OUT ON TAKEOFF.
(With Sufficient Runway Remaining).

(1) Cut power and decelerate to a stop.

NOTE

The airplane can be accelerated from a standing start to 105 MPH on the ground, and then decelerated to a stop with heavy braking within 3267 feet of the starting point of the takeoff run at sea level, and within 4527 feet of the starting point at 5000 feet altitude (zero wind, hard surface runway, standard conditions, full gross weight).

ENGINE-OUT AFTER TAKEOFF—ABOVE 105 MPH.
(Without Sufficient Runway Ahead).

(1) Throttles -- Full forward.
(2) Propellers -- High RPM.
(3) Landing Gear -- UP.
(4) Determine inoperative engine (idle engine same side as idle foot).
(5) Propeller -- FEATHER (inoperative engine).
(6) Climb out at 105 MPH.
(7) Trim Tabs -- Set.
(8) Accelerate to 120 MPH after obstacle is cleared.
(9) Wing Flaps -- UP (if extended) in small increments.
(10) Secure inoperative engine as follows:
  (a) Auxiliary Fuel Pump -- OFF.
  (b) Mixture -- IDLE CUT-OFF.
  (c) Magneto Switches -- OFF.
  (d) Generator Switch -- OFF.
  (e) Fuel Selector Valve -- OFF.

SUPPLEMENTARY INFORMATION CONCERNING ENGINE-OUT DURING TAKEOFF.

The most critical time for an engine-out condition in a twin-engine airplane is during a two or three second period late in the takeoff run while the airplane is accelerating to a safe engine-out speed. A detailed knowledge of recommended single-engine airspeeds, Figure 3-1, is essential for safe operation of this airplane.

These speeds should be memorized for instant recollection in an emergency, and it is worthwhile to review them mentally, prior to every takeoff. The following paragraphs present a detailed discussion of the problems associated with engine failures during takeoff.

SINGLE-ENGINE AIRSPEED NOMENCLATURE	IAS—MPH
1. Minimum control speed	87
2. Recommended safe single-engine speed	105
3. Best angle-of-climb speed	108
4. Best rate-of-climb speed (flaps up)	120

Figure 3-1

MINIMUM CONTROL SPEED. The twin-engine airplane must reach the minimum control speed (87 MPH) before full control deflections can counteract the adverse rolling and yawing tendencies associated with one engine inoperative and full power operation on the other engine.

RECOMMENDED SAFE SINGLE-ENGINE SPEED. Although the airplane is controllable at the minimum control speed, the airplane performance is so far below optimum that continued flight near the ground is improbable. A more suitable recommended safe single-engine speed is 105 MPH, since at this speed, altitude can be maintained more easily while the landing gear is being retracted and the propeller is being feathered.

BEST ANGLE-OF-CLIMB SPEED. The best angle-of-climb speed for single-engine operation becomes important when there are obstacles ahead on takeoff, because once the best single-engine angle-of-climb speed is reached, altitude becomes more important than airspeed until the obstacle is cleared. The best single-engine angle-of-climb speed is approximately 108 MPH with flaps up. For convenience, a speed of 105 MPH may be used for any flap setting between 0 -15°.

BEST RATE-OF-CLIMB SPEED (FLAPS UP). The best rate-of-climb speed for single-engine operation becomes important when there are no obstacles ahead on takeoff, or when it is difficult to maintain or gain altitude in single-engine emergencies. The best single-engine rate-of-climb

speed is 120 MPH with flaps up, at sea level. The variation of flaps-up best rate-of-climb speed with altitude is shown in Section VI. For best climb performance, the wings should be banked 5° toward the operative engine.

Upon engine failure after reaching 105 MPH on takeoff, the twin-engine pilot has a significant advantage over a single-engine pilot, for he has the choice of stopping or continuing the takeoff. This would be similar to the choice facing a single-engine pilot who has suddenly lost slightly more than half of his takeoff power. In this situation, the single-engine pilot would be extremely reluctant to continue the takeoff if he had to climb over obstructions. However, if the failure occurred at an altitude as high or higher than surrounding obstructions, he would feel free to maneuver for a landing back at the airport.

Fortunately the airplane accelerates through this "area of decision" in just a few seconds. However, to make an intelligent decision in this type of an emergency, one must consider the field length, obstruction height, field elevation, air temperature, headwind, and the gross weight. The flight paths illustrated in Figure 3-2 indicate that the "area of decision" is bounded by: (1) the point at which 105 MPH is reached and (2) the point where the obstruction altitude is reached. An engine failure in this area requires an immediate decision. Beyond this area, the airplane, within the limitations of single-engine climb performance shown in Section VI, may be maneuvered to a landing back at the airport.

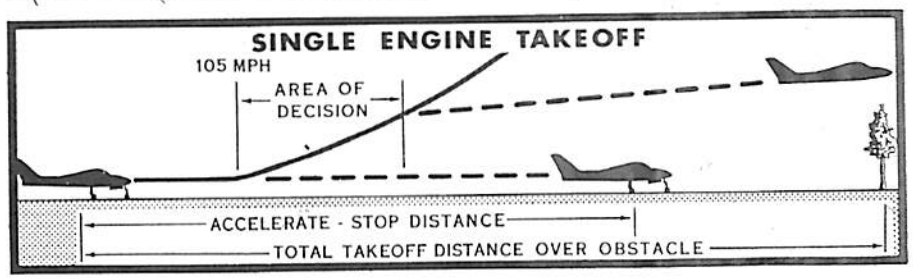

Figure 3-2

*At sea level, with zero wind and 5200 pounds gross weight, the distance to accelerate to 105 MPH and stop is 3267 feet, while the total unobstructed area required to takeoff and climb over a 50-foot obstacle after an engine failure at 105 MPH is 4150 feet. This total distance over an obstacle can be reduced slightly under more favorable conditions of gross weight, headwind, or obstruction height. However, it is recommended that in

most cases it would be better to discontinue the takeoff, since any slight mismanagement of the single-engine procedure would more than offset the small distance advantage offered by continuing the takeoff. The advantage of discontinuing the takeoff is even more obvious at higher altitudes where the corresponding distances are 3798 and 7994 respectively, at 2500 feet. Still higher field elevations will cause the engine-out takeoff distance to lengthen disproportionately until an altitude is reached where a successful takeoff is improbable unless the airspeed and height above the runway at engine failure are great enough to allow a slight deceleration and altitude loss while the airplane is being prepared for a single-engine climb.

During single-engine takeoff procedures over an obstacle, only one condition presents any appreciable advantage, and this is headwind. A decrease of approximately 1% in ground distance required to clear a 50-foot obstacle can be gained for each 1 MPH of headwind. Excessive speed above best single-engine climb speed at engine failure is not nearly as advantageous as one might expect since deceleration is rapid and ground distance is used up quickly at higher speeds while the airplane is being cleaned up for climb. However, the extra speed is important for controllability.

The following facts should be used as a guide at the time of engine failure: (1) discontinuing a takeoff upon engine failure is advisable under most circumstances; (2) altitude is more valuable to safety after takeoff than is airspeed in excess of the best single-engine climb speed since excess airspeed is lost much more rapidly than is altitude; (3) climb or continued level flight at moderate altitude is improbable with the landing gear extended and the propeller windmilling; (4) in no case should the airspeed be allowed to fall below the engine-out best angle-of-climb speed, even though altitude is lost, since this speed will always provide a better chance of climb, or a smaller altitude loss, than any lesser speed. The engine-out best rate-of-climb speed will provide the best chance of climb or the least altitude loss, and is preferable unless there are obstructions which make a steep climb necessary.

Engine-out procedures should be practiced in anticipation of an emergency. This practice should be conducted at a safe altitude, with full power operation on both engines, and should be started at a safe speed of at least 120 MPH. As recovery ability is gained with practice, the starting speed may be lowered in small increments until the feel of the airplane in emergency conditions is well known. Practice should be continued until: (1) an instinctive corrective reaction is developed, and the corrective procedure is automatic; and (2) airspeed, altitude, and heading can be main-

tained easily while the airplane is being prepared for a climb. In order to simulate an engine failure, set both engines at full power operation, then at a chosen speed pull the mixture control of one engine into IDLE CUT-OFF, and proceed with single-engine emergency procedures. Simulated single-engine procedures can also be practiced by setting propeller RPM for zero thrust as shown in Figure 3-3.

ENGINE-OUT DURING FLIGHT.

(1) Determine inoperative engine (idle engine same side as idle foot).
(2) Power -- Increase as required.
(3) Mixture -- Adjust for altitude.

Before securing inoperative engine:

(1) Fuel Flow -- Check, if deficient, position auxiliary fuel pump switch to ON.

NOTE

If fuel selector valve is in AUXILIARY TANK position, switch to MAIN TANK and feel for detent.

(2) Fuel Quantity -- Check, and switch to opposite MAIN TANK if necessary.
(3) Oil Pressure and Oil Temperature -- Check, shut down engine if oil pressure is low.
(4) Magneto Switches -- Check.

If proper corrective action was taken, engine will restart. If it does not, secure as follows:

(1) Auxiliary Fuel Pump -- OFF.
(2) Mixture -- IDLE CUT-OFF.
(3) Propeller -- FEATHER.
(4) Turn off generator, magneto switches and fuel selector valve.
(5) Turn off sufficient electrical equipment to eliminate a negative ammeter reading.

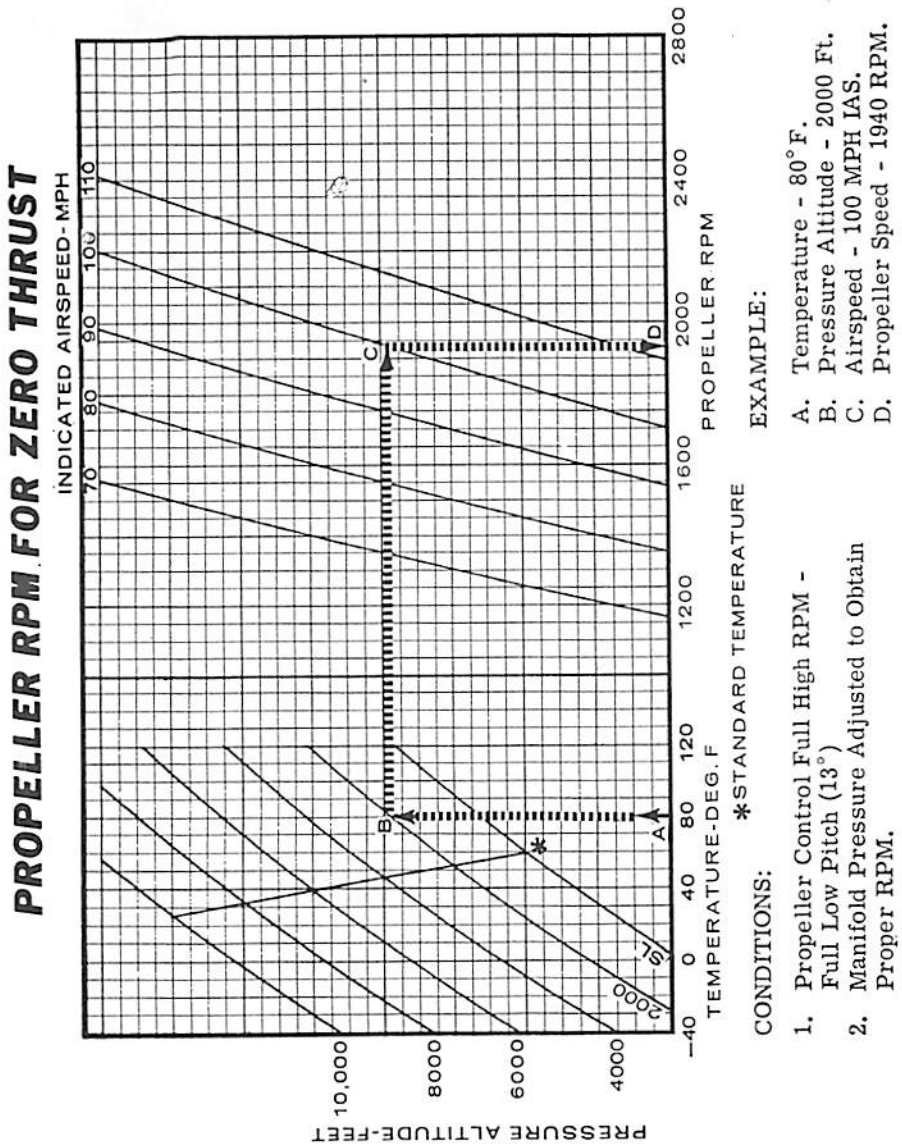

EXAMPLE:

A. Temperature - 80° F.
B. Pressure Altitude - 2000 Ft.
C. Airspeed - 100 MPH IAS.
D. Propeller Speed - 1940 RPM.

CONDITIONS:

1. Propeller Control Full High RPM - Full Low Pitch (13°)
2. Manifold Pressure Adjusted to Obtain Proper RPM.

Figure 3-3.

ENGINE RESTARTS IN FLIGHT (After Feathering).

(1) Fuel Selector Valve Handle -- MAIN (feel for detent).
(2) Throttle -- Advance until gear warning horn is silent.
(3) Propeller -- HIGH RPM.

NOTE

With the optional propeller unfeathering system installed, the propeller will automatically windmill when the propeller lever is moved to the HIGH RPM position. As propeller unfeathers and starts to windmill, decrease propeller lever to cruise position.

(4) Mixture -- FULL RICH.
(5) Magneto Switches -- ON.
(6) Starter Button -- Press.
(7) Primer Switch -- Engage.
(8) Starter Button and Primer Switch -- Release when engine fires.
(9) Power -- Increase slowly until cylinder head temperature reaches 200° F.

NOTE

If start is unsuccessful, turn magneto switches OFF, retard mixture to IDLE CUT-OFF, open throttle fully, and engage starter for several revolutions. Then repeat air start procedures.

MAXIMUM GLIDE.

In the event of a double engine-out condition, maximum gliding distance can be obtained by feathering both propellers, and maintaining approximately 110 MPH with the landing gear and wing flaps up. Refer to the Maximum Glide Diagram, Figure 3-4, for maximum glide data.

SINGLE-ENGINE APPROACH AND LANDING.

(1) Approach at 110 MPH with excess altitude.
(2) Delay extension of landing gear until within gliding distance of field.
(3) Avoid use of flaps until landing is assured.
(4) Decrease speed below 105 MPH only if landing is a certainty.

FORCED LANDING.
(Precautionary Landing with Power).

(1) Drag over selected field with flaps 15° and 105 MPH airspeed, noting type of terrain and obstructions.
(2) Plan a wheels-down landing if surface is smooth and hard (pasture, frozen lake, etc.).
(3) Execute a normal short-field landing, keeping nosewheel off ground until speed is decreased.
(4) If terrain is rough or soft, plan a wheels-up landing as follows:
  (a) Select a smooth grass-covered runway, if possible.
  (b) Landing Gear Switch -- UP.
  (c) Approach at 105 MPH with flaps down only 20°.
  (d) All Switches Except Ignition Switches -- OFF.
  (e) Unlatch cabin door prior to flare-out.

IMPORTANT

Be prepared for a mild tail buffet as the cabin door is opened.

  (f) Land in a slightly tail-low attitude.
  (g) Mixtures -- IDLE CUT-OFF (both engines).
  (h) Ignition Switches -- OFF.
  (i) Fuel Selector Valve Handles -- OFF.

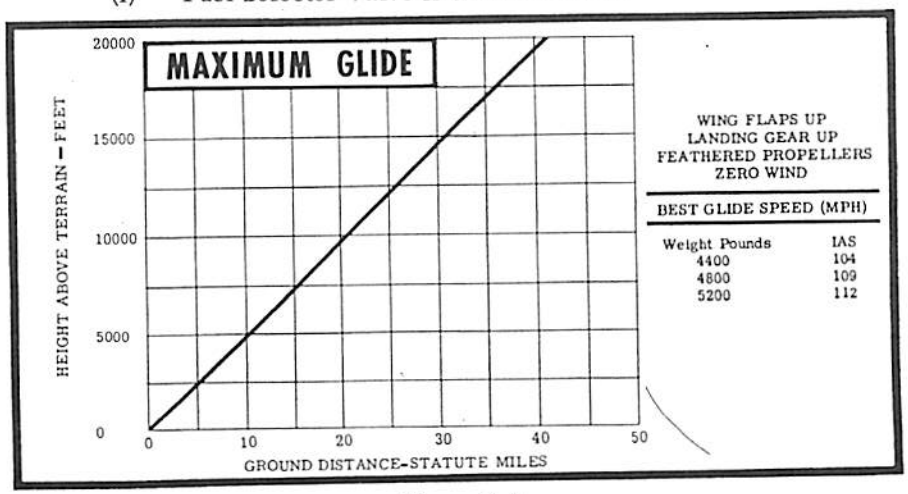

Figure 3-4

NOTE

Airplane will slide straight ahead about 500 feet on smooth sod with very little damage.

FORCED LANDING (Complete Power Loss).

(1) Mixtures -- IDLE CUT-OFF.
(2) Feather propellers and rotate them to a HORIZONTAL position with starter, if time permits.
(3) Fuel Selector Valve Handles -- OFF.
(4) All switches OFF except battery switch.
(5) Approach at 116 MPH.
(6) If field is smooth and hard, extend landing gear when within gliding distance of field.
(7) Extend flaps as necessary when within gliding distance of field.
(8) Battery Switch -- OFF.
(9) Make a normal landing, keeping nosewheel off the ground as long as practical.
(10) If terrain is rough or soft, plan a wheels-up landing as follows:
  (a) Select a smooth grass-covered runway if possible.
  (b) Landing Gear Switch -- UP.
  (c) Approach at 105 MPH with flaps down only 20°.
  (d) Battery Switch -- OFF.
  (e) Unlatch cabin door prior to flare-out.

IMPORTANT

Be prepared for a mild tail buffet as cabin door is opened.

  (f) Land in a slightly tail-low attitude.

SYSTEM EMERGENCY PROCEDURES.

FUEL SYSTEM.

In the event of an engine-driven fuel pump failure, turn the auxiliary fuel pump switch (on the inoperative side) to ON. This pump will supply sufficient fuel for emergency takeoff, however, the mixture control must be reset.

IMPORTANT

If both an engine-driven fuel pump and an auxiliary fuel pump fail on the same side of the airplane, the failing engine cannot be supplied with fuel from the opposite MAIN tank since that auxiliary fuel pump will operate on the low pressure setting as long as the corresponding engine fuel pump is operative.

LANDING GEAR SYSTEM.

MANUAL EXTENSION.

When the landing gear will not extend electrically, it may be extended manually in accordance with the following steps:

(1) Before proceeding manually, check landing gear circuit breakers with landing gear switch DOWN. If circuit breakers are tripped, allow 3 minutes for them to cool before resetting.
(2) If circuit breaker is not tripped, place landing gear switch in the OFF (middle) position.
(3) Crank gear down approximately two turns past the point where the gear-down indicator lights (green) come on (approximately 60 turns of the handcrank).

NOTE

During manual extension of the gear, never release the hand crank to let it turn freely of its own accord.

(4) Check gear-down indicator lights and gear warning horn with throttle retarded.
(5) Stow handcrank.

NOTE

The landing gear should never be retracted with the manual system, as undue loads will be imposed and cause excessive wear on the cranking mechanism.

(6) Landing Gear Switch -- DOWN position.

LANDING EMERGENCIES.

LANDING WITH FLAT MAIN GEAR TIRE.

If a blowout occurred during takeoff, and the defective main gear tire is identified, proceed as follows:

(1) Landing Gear Switch -- UP.
(2) Fuel Selector Valve Handles -- Turn to main tank on same side as defective tire and feel for detent. Proceed to destination to reduce fuel load.

NOTE

Fuel should be used from this tank first to lighten the load on this wing prior to attempting a landing, if in-flight time permits. However, an adequate supply of fuel should be left in this tank so that it may be used during landing.

(3) Fuel Selectors - Left Engine -- LEFT MAIN (feel for detent).
Right Engine -- RIGHT MAIN (feel for detent).
(4) Select a runway with a crosswind from the side opposite the defective tire if a crosswind landing is required.
(5) Landing Gear Switch -- DOWN (below 140 MPH).
(6) Check landing gear down indicator lights (green) for indication.
(7) Flaps Switch -- DOWN. Fully extend flaps to 35°.
(8) In approach, align airplane with edge of runway opposite the defective tire, allowing room for a mild turn in the landing roll.
(9) Land slightly wing-low on side of inflated tire and lower nosewheel to ground immediately, for positive steering.
(10) Use full aileron in landing roll, to lighten load on defective tire.
(11) Apply brake only on the inflated tire, to minimize landing roll and maintain directional control.
(12) Stop airplane to avoid further tire and wheel damage, unless active runway must be cleared for other traffic.

LANDING WITH FLAT NOSE GEAR TIRE.

If a blowout occurred on the nose gear tire during takeoff, prepare for a landing as follows:

(1) Landing Gear Switch -- Leave DOWN.

IMPORTANT

Do not attempt to retract the landing gear if a nose gear tire blowout occurs. The nose gear tire may be distorted enough to bind the nosewheel strut within the wheel well and prevent later gear extension.

(2) Move disposable load to baggage area, and passengers to available rear seat space.
(3) Flaps Switch -- DOWN. Extend flaps from 0° to 20°, as desired.
(4) Land in a nose-high attitude with or without power.
(5) Maintain back pressure on control wheel to hold nosewheel off the ground in landing roll.
(6) Use minimum braking in landing roll.
(7) Throttles -- Retard in landing roll.
(8) As landing roll speed diminishes, hold control wheel fully aft until airplane is stopped.
(9) Avoid further tire damage by holding additional taxi to a minimum.

LANDING WITH DEFECTIVE MAIN GEAR.

Reduce the fuel load in the tank on the side of the faulty main gear as explained in paragraph LANDING WITH FLAT MAIN GEAR TIRE. When fuel load is reduced, prepare to land as follows:

(1) Fuel Selectors - Left Engine -- LEFT MAIN (feel for detent).
Right Engine -- RIGHT MAIN (feel for detent).
(2) Select a wide, hard surface runway, or if necessary a wide sod runway. Select a runway with crosswind from the side opposite the defective landing gear, if a crosswind landing is necessary.
(3) Landing Gear Switch -- DOWN.
(4) Flaps Switch -- DOWN. Extend flaps to 30°.
(5) In approach, align airplane with edge of runway opposite the defective landing gear, allowing room for a ground-loop in landing roll.
(6) Battery Switch -- OFF.
(7) Land slightly wing-low toward the operative landing gear and lower the nosewheel immediately, for positive steering.
(8) Mixture Levers -- IDLE CUT-OFF (both engines).
(9) Use full aileron in landing roll to lighten the load on the defective landing gear.

(10) Apply brake only on the operative landing gear to maintain directional control and minimize the landing roll.
(11) Fuel Selector Valve Handles -- OFF.
(12) Evacuate the airplane as soon as it stops.

LANDING WITH DEFECTIVE NOSE GEAR.

Sod Runway — Main Gear Retracted.

This procedure will produce a minimum amount of airplane damage on smooth runways. This procedure is also recommended for short, rou or uncertain field conditions.

(1) Select a smooth grass-covered runway, if possible.
(2) Landing Gear Switch -- UP.
(3) Approach at 105 MPH with flaps down only 20°.
(4) All Switches Except Ignition Switches -- OFF.
(5) Unlatch cabin door prior to flare-out.

IMPORTANT

Be prepared for mild tail buffet as the cabin door is opened.

(6) Land in a slightly tail-low attitude.
(7) Mixture Levers -- IDLE CUT-OFF (both engines).
(8) Ignition Switches -- OFF.
(9) Fuel Selector Valve Handles -- OFF.

Smooth Hard Surface Runway — Main Gear Extended.

(1) Move disposable load to baggage area, and passengers to available rear seat space.
(2) Select a smooth hard surface runway.
(3) Landing Gear Switch -- DOWN.
(4) Approach at 105 MPH with flaps down 20°.
(5) All Switches Except Ignition Switches -- OFF.
(6) Land in a slightly tail-low attitude.
(7) Mixture Levers -- IDLE CUT-OFF (both engines).
(8) Ignition Switches -- OFF.
(9) Hold nose off throughout ground roll - Lower gently as speed dissipates.

DITCHING.

(1) Plan approach into wind if winds are high and seas are heavy. With heavy swells and light wind, land parallel to swells, being careful not to allow wing tip to hit first.

(2) Approach with landing gear retracted, flaps 35°, and enough power to maintain approximately 200 ft/min. rate-of-descent at approximately 108 MPH at 4600 pounds gross weight.

(3) Maintain a continuous descent until touchdown, to avoid flaring and touching down tail-first, pitching forward sharply, and decelerating rapidly. Strive for initial contact at fuselage area below rear cabin section (point of maximum longitudinal curvature of fuselage).

SECTION IV
OPERATING LIMITATIONS

OPERATIONS AUTHORIZED.

Your Cessna with standard equipment, as certificated under FAA Type Certificate No. 3A10, is approved for day and night operation under VFR conditions.

MANEUVERS-NORMAL CATEGORY.

The airplane exceeds the requirements of the Federal Aviation Regulations, Part 3, set forth by the United States Government for airworthiness. Spins and aerobatic maneuvers are not permitted in normal category airplanes in compliance with these regulations. In connection with the foregoing, the following gross weight and flight load factors apply:

Maximum Takeoff Weight	5200 lbs
Maximum Landing Weight	5200 lbs
*Flight Load Factor	
Flaps UP	+3.8G
	-1.52G
Flaps DOWN	+2.0G

*The design load factors are 150% of the above and in all cases the structure exceeds design loads.

Your airplane must be operated in accordance with all FAA approved markings, placards, and checklists in the airplane. If there is any information in this section that contradicts the FAA approved markings, placards, and checklists it is to be disregarded.

AIRSPEED LIMITATIONS (CAS).

Maximum Structural Cruising Speed	
Level Flight or Climb	210 MPH
Maximum Speed	
Flaps Extended 15°	180 MPH
Flaps Extended 15° - 35°	140 MPH
Gear Extended	140 MPH

*Maximum Maneuvering Speed . . . . 170 MPH

*The maximum speed at which you can use abrupt control travel.

AIRSPEED INDICATOR INSTRUMENT MARKINGS.

The following is a list of the certificated calibrated airspeed (CAS) limitations for the airplane.

Never Exceed (glide or dive, smooth air) . .	257 MPH (red line)
Caution Range	210-257 MPH (yellow arc)
Normal Operating Range	85-210 MPH (green arc)
Flap Operating Range (0° - 35°) . .	75-140 MPH (white arc)

ENGINE OPERATION LIMITATIONS.

Maximum Power and Speed . . . . . (for all operations)	260 BHP at 2625 RPM

ENGINE INSTRUMENT MARKINGS.

OIL TEMPERATURE GAGES.

Normal Operating Range	80° to 225° F (green arc)
Maximum Temperature	225° F (red line)

OIL PRESSURE GAGES.

Idling Pressure	10 PSI (red line)
Normal Operating Range	30 to 60 PSI (green arc)
Maximum Pressure	100 PSI (red line)

CYLINDER HEAD TEMPERATURE.

Normal Operating Range	200° to 460° F (green arc)
Maximum Temperature	460° F (red line)

MANIFOLD PRESSURE.

Normal Operating Range	15 to 24 in. Hg. (green arc)

TACHOMETER.

Normal Operating Range . .	2100 to 2450 RPM (green arc)
Maximum Engine Rated Speed	2625 RPM (red line)

FUEL FLOW GAGE.

Normal Operating Range	0 to 23 GPH (green arc)
Minimum and Maximum Fuel Flows . .	0 to 23 GPH (red line) 2.5 and 20.1 PSI (red line)

WING LOCKERS.

The wing lockers are intended primarily for low density items such as luggage and briefcases. The floor of the wing lockers in particular is primary structure. Therefore, care should be exercised during loading and unloading to prevent damage. When loading high density objects, insure that adequate protection is available to prevent damage to any airplane primary structure.

WEIGHT AND BALANCE.

The following information will enable you to operate your Cessna within the prescribed weight and center of gravity limitations. To figure the weight and balance for your particular airplane, use figures 4-1, 4-2, and 4-3 as follows.

Take the licensed Empty Weight and Moment/1000 from the Weight and Balance Data sheet, plus any changes noted on forms FAA-337, carried in your airplane, and write them down in the proper columns of figure 4-1. Using figure 4-2, determine the moment/1000 of each item to be carried. Total the weights and moments/1000 and use figure 4-3 to determine whether the point falls within the envelope and if the loading is acceptable.

SAMPLE PROBLEM	Sample Aircraft Weight (lbs)	Sample Aircraft Moment (lb-ins.)/1000	Sample Aircraft	Sample Aircraft Moment (lb-ins.)/1000
1. Licensed Empty Weight (Sample Problem).....	3434.7 3420.0	120.0 120.5		
2. Oil-W/Opt./Oil Filter *(26 Qts. x 1.875 lb/qt.)	49.0	-0.2	49.0	-0.2
3. Pilot and Passenger	340.0	12.6		
4. Rear Passengers (Standard Seating)	510.0	36.2		
5. Fuel (gals. x 6 lbs./gal.) Main Tanks (100 gals.) ..... Auxiliary Tanks ..... Wing Locker Tanks	600 180	21.0 8.5		
6. Baggage (Sta. 96.0)..... (124.0) ..... (Wing Lockers)	200.0	19.2		
7. Total Aircraft Weight (Loaded)	5119.0	209.7		
8. Locate this point (5119.0 at 209.7) on Figure 4-3 and since this point falls within the envelope, the loading is acceptable.				
*Note: Normally full oil may be assumed for all flights.				

Figure 4-1. NEW SERIES 1965

LOADING CHART

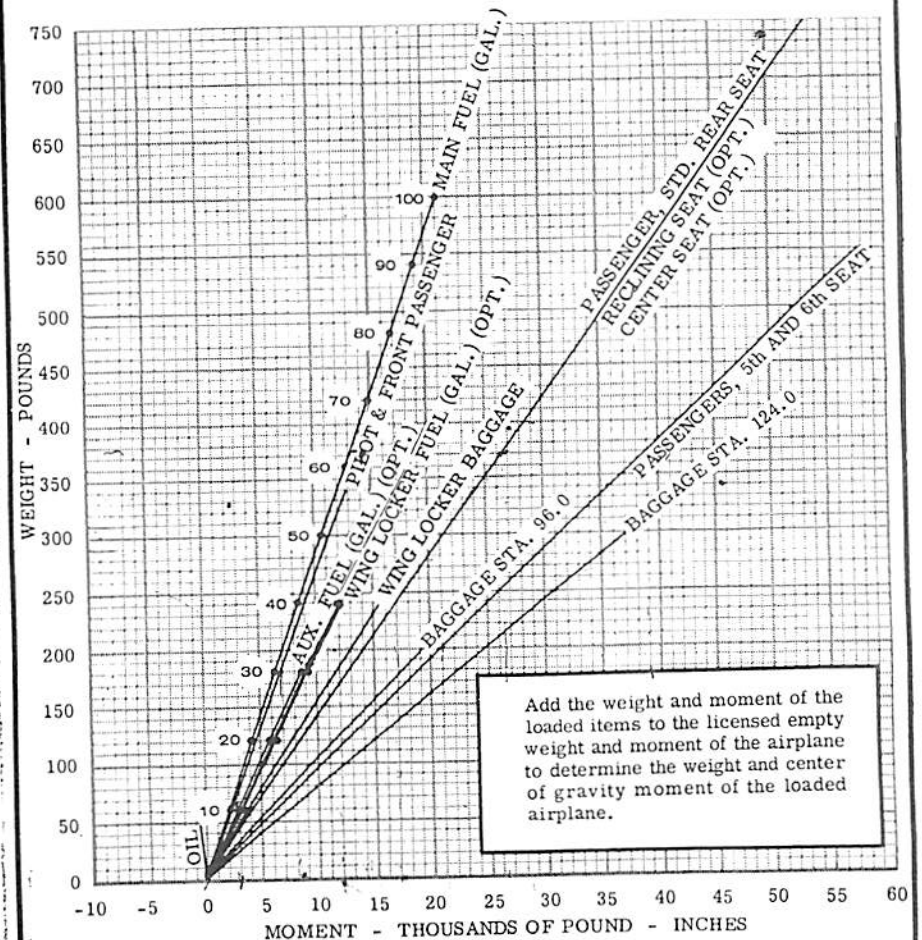

Figure 4-2.

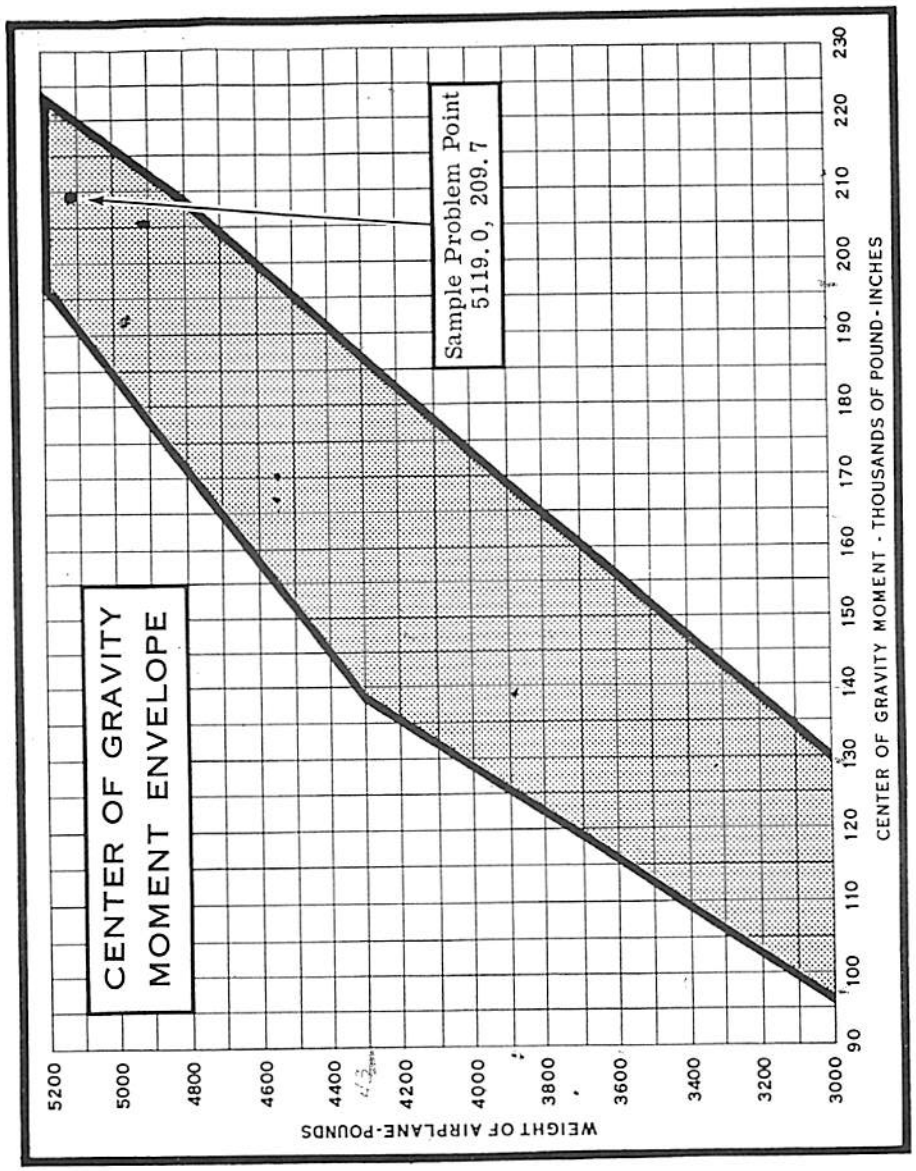

Figure 4-3.

SECTION I
OPERATING CHECKLIST

If your airplane is to retain that new-plane performance and dependability, certain inspection and maintenance requirements must be followed. It is wise to follow a planned schedule of lubrication and preventive maintenance based on climatic and flying conditions encountered in your locality.

Keep in touch with your Cessna Dealer, and take advantage of his knowledge and experience. He knows your airplane and how to maintain it. He will remind you when lubrications and oil changes are necessary, and about other seasonal and periodic services.

GROUND HANDLING.

The airplane is most easily and safely maneuvered during ground handling by a tow-bar attached to the nosewheel. A tow-bar, supplied with the airplane, is located in the baggage compartment.

NOTE

When using the tow-bar, never exceed the nosewheel turning radius of 55° either side of center, or damage to the gear will result. Never use a tug for towing by nose gear. Refer to Cessna Model 310 Service Manual for towing procedures.

MOORING YOUR AIRPLANE.

Proper tie-down procedure is your best precaution against damage to your parked airplane by gusty or strong winds. To tie-down your airplane securely, proceed as follows:

(1) Set the parking brake and install control wheel lock.
(2) Tie strong ropes or chains (700 pounds tensile strength) to wing tie-down fittings.
(3) Caster the nosewheel to the extreme left or right positions.
(4) Tie a strong rope or chain (700 pounds tensile strength) to the tail skid.
(5) Recommend installation of pitot tube cover.

WINDOWS AND WINDSHIELDS.

The plastic windshield and windows should be kept clean and waxed at all times. To prevent scratches and crazing, wash them carefully with plenty of soap and water, using the palm of the hand to feel and dislodge dirt and mud. A soft cloth, chamois or sponge may be used, but only to carry water to the surface. Rinse thoroughly, then dry with a clean, moist chamois. Rubbing the surface of the plastic with a dry cloth builds up an electrostatic charge which attracts dust particles in the air. Wiping with a moist chamois will remove both the dust and this charge.

Remove oil and grease with a cloth moistened with kerosene. Never use gasoline, benzine, alcohol, acetone, carbon tetrachloride, fire extinguisher or anti-ice fluid, lacquer thinner or glass cleaner. These materials will soften the plastic and may cause it to craze.

After removing dirt and grease, if the surface is not badly scratched, it should be waxed with a good grade of commercial wax. The wax will fill in minor scratches and help prevent further scratching. Apply a thin, even coat of wax and bring it to a high polish by rubbing lightly with a clean, dry, soft flannel cloth. Do not use a power buffer; the heat generated by the buffing pad may soften the plastic.

Do not use a canvas cover on the windshield unless freezing rain or sleet is anticipated. Canvas covers may scratch the plastic surface.

PAINTED SURFACES.

The painted exterior surfaces of your new Cessna require an initial curing period which may be as long as 90 days after the finish is applied. During this curing period some precautions should be taken to avoid damaging the finish or interfering with the curing process. The finish should be cleaned only by washing with clean water and mild soap, followed by a rinse water and drying with cloths or a chamois. Do not use polish or wax, which would exclude air from the surface, during this 90-day curing period. Do not rub or buff the finish and avoid flying through rain, hail, or sleet.

Once the finish has cured completely, it may be waxed with a good automotive wax. A heavier coating of wax on the leading edges of the wings and tail and on the front engine nose cap and propeller spinner will help reduce the abrasion encountered in these areas.

PROPELLER CARE.

Preflight inspection of propeller blades for nicks, and wiping them occasionally with an oily cloth to clean off grass and bug stains will assure long, trouble-free service. It is vital that small nicks on the propellers, particularly near the tips and on the leading edges, are dressed out as soon as possible since these nicks produce stress concentrations, and if ignored, may result in cracks. Never use an alkaline cleaner on the blades; remove grease and dirt with Stoddard solvent.

INTERIOR CARE.

To remove dust and loose dirt from the upholstery, headliner, and carpet, clean the interior regularly with a vacuum cleaner.

Blot up any spilled liquid promptly, with cleansing tissue or rags. Don't pat the spot; press the blotting material firmly and hold it for several seconds. Continue blotting until no more liquid is taken up. Scrape off sticky materials with a dull knife, then spot-clean the area.

Oily spots may be cleaned with household spot removers, used sparingly. Before using any solvent, read the instructions on the container and test it on an obscure place on the fabric to be cleaned. Never saturate the fabric with a volatile solvent; it may damage the padding and backing materials.

Soiled upholstery and carpet may be cleaned with foam-type detergent, used according to the manufacturer's instructions. To minimize wetting the fabric, keep the foam as dry as possible and remove it with a vacuum cleaner.

The plastic trim, instrument panel and control knobs need only be wiped with a damp cloth. Oil and grease on the control wheel and control knobs can be removed with a cloth moistened with kerosene. Volatile solvents, such as mentioned in paragraphs on care of the windshield, must never be used since they soften and craze the plastic.

INSPECTION SERVICE AND INSPECTION PERIODS.

With your airplane you will receive an Owner's Service Policy. Coupons attached to the policy entitle you to an initial inspection and the first 100-hour inspection at no charge. If you take delivery from your Dealer, he will perform the initial inspection before delivery of the airplane to you.

If you pick up the airplane at the factory, plan to take it to your Dealer reasonably soon after you take delivery of it. This will permit him to check it over and to make any minor adjustments that may appear necessary. Also, plan an inspection by your Dealer at 100 hours or 180 days, whichever comes first. This inspection is also performed for you by your Dealer at no charge. While these important inspections will be performed for you by any Cessna Dealer, in most cases you will prefer to have the Dealer from whom you purchased the airplane accomplish this work.

Federal Aviation Regulations require that all airplanes have a periodic (annual) inspection as prescribed by the administrator, and performed by a person designated by the administrator. In addition, 100-hour periodic inspections made by an "appropriately-rated mechanic" are required if the airplane is flown for hire. The Cessna Aircraft Company recommends the 100-hour periodic inspection for your airplane. The procedure for this 100-hour inspection has been carefully worked out by the factory and is followed by the Cessna Dealer Organization. The complete familiarity of the Cessna Dealer Organization with Cessna equipment and with factory-approved procedures provides the highest type of service possible at lower cost.

OWNER FOLLOW-UP SYSTEM

Your Cessna Dealer has an Owner Follow-up System to notify you when he receives information that applies to your Cessna. In addition, if you wish, you may choose to receive similar notification directly from the Cessna Service Department. A subscription card is supplied in your airplane file for your use, should you choose to request this service. Your Cessna Dealer will be glad to supply you with details concerning these follow-up programs, and stands ready through his Service Department to supply you with fast, efficient, low cost service.

AIRPLANE FILE.

There are miscellaneous data, information, and licenses that are a part of the airplane file. The following is a checklist for that file. In addition, a periodic check should be made of the latest Federal Aviation Regulations to insure that all data requirements are met.

A. To be displayed in the airplane at all times:

(1) Aircraft Airworthiness Certificate (Form FAA-1362).
(2) Aircraft Registration Certificate (Form FAA-500A).
(3) Airplane Radio Station License (Form FCC-404, if transmitter installed).

B. To be carried in the airplane at all times:

(1) Weight and Balance, and associated papers (latest copy of the Repair and Alteration Form, Form FAA-337, if applicable).
(2) Aircraft Equipment List.
(3) Pilot's Checklist.

C. To be made available upon request:

(1) Airplane Log Book.
(2) Engine Log Books.

NOTE

Cessna recommends that these items plus the Owner's Manual and the Cessna 310 Power Computer be carried in the airplane at all times.

Most of the items listed are required by the United States Federal Aviation Regulations. Since the regulations of other nations may require other documents and data, owners of exported aircraft should check with their own aviation officials to determine their individual requirements.

LUBRICATION AND SERVICING PROCEDURES.

Specific servicing information is provided here for items requiring daily attention. A Servicing Intervals Checklist is included to inform the pilot when to have other items checked and serviced.

DAILY.

FUEL TANK FILLERS -- Service after each flight. Keep full to retard condensation in tanks. Refer to Servicing Requirements table on inside back cover for fuel specification, grade, and quantity.

FUEL TANK DRAINS -- Drain before first flight each day and after each refueling.

FUEL STRAINER DRAINS -- Drain about two (2) ounces of fuel from each fuel strainer before first flight each day and after refueling.

OIL DIPSTICK AND FILLERS -- Check on preflight and add oil as necessary. Do not operate on less than 9 quarts. To minimize loss of oil through breather, fill to 10 quart level for normal flights of less than 3 hours. For extended flights, fill to 12 quarts. If optional oil filter is installed, 1 additional quart is required when the filter element is changed. Refer to Servicing Requirements table on inside back cover for oil specifications and grades.

TIRES -- Check tires for proper inflation. Refer to Servicing Requirements table on inside back cover for proper tire pressure.

SERVICING INTERVALS CHECKLIST.

EACH 50 HOURS.

BATTERIES -- Check electrolyte level every 50 hours (at least every 30 days) or more often in hot weather.

ENGINE OIL AND OIL FILTER -- Change engine oil and replace filter element. If optional oil filter is not installed, change oil and clean screen every 25 hours. Change engine oil at least every four months even though less than 50 hours have been accumulated. Reduce periods for prolonged operation in dusty areas, cold climates, or when short flights and long idle periods result in sludging conditions.

INDUCTION AIR FILTER -- Service every 50 hours, more often under dusty conditions.

EACH 100 HOURS.

SHIMMY DAMPENER -- Check and fill as required.

BRAKE MASTER CYLINDERS -- Check fluid level in reservoirs and fill as required through plugs on cylinder heads. Fill with hydraulic fluid (Red).

SUCTION RELIEF VALVE -- Remove breather and clean.

HEATER FUEL FILTER -- Remove and clean with unleaded gasoline.

OIL SEPARATORS -- Remove and clean.

EACH 500 HOURS.

SHOCK STRUTS -- Check and fill as required.

VACUUM SYSTEM FILTER -- Replace.

WHEEL BEARINGS -- Lubricate. Lubricate at first 100 hours and each 500 hours thereafter.

FLYABLE STORAGE

Flyable storage applies to all aircraft which will not be flown for an indefinite period but which are to be kept ready to fly with the least possible preparation. If the aircraft is to be stored temporarily, or indefinitely, refer to the Service Manual for proper storage procedures.

Aircraft which are not in daily flight should have the propellers rotated, by hand, five revolutions at least once each week. In damp climates and in storage areas where the daily temperature variation can cause condensation, propeller rotation should be accomplished more frequently. Rotating the propeller an odd number of revolutions, redistributes residual oil on the cylinder walls, crankshaft and gear surfaces and repositions the pistons in the cylinders, thus preventing corrosion. Rotate propellers as follows:

(1) Throttles - IDLE.
(2) Mixtures - IDLE CUT-OFF.

(3) Magneto Switches - OFF.
(4) Propellers - ROTATE CLOCKWISE. Manually rotate propellers five revolutions, standing clear of arc of propeller blades.

Keep fuel tanks full to minimize condensation in the fuel tanks. Maintain battery at full charge to prevent electrolyte from freezing in cold weather. If the aircraft is stored outside, tie-down aircraft in anticipation of high winds. Secure aircraft as follows:

(1) Secure rudder with the optional rudder gust lock or with a control surface lock over the fin and rudder. If a lock is not available, caster the nose wheel to the full left or right position.
(2) Install control column lock in pilot's control column, if available. If column lock is not available, tie the pilot's control wheel full aft with a seat belt.
(3) Tie ropes or chains to the wing tie-down fittings located on the underside of each wing. Secure the opposite ends of the ropes or chains to ground anchors. Chock the main landing gear tires; do not set the parking brake if a long period of inactivity is anticipated as brake seizing can result.
(4) Secure a rope (no chains or cables) to the upper nose gear trunnion and secure opposite end of rope to a ground anchor. Chock the nose landing gear tire.
(5) Secure the middle of a rope to the tail tie-down fitting. Pull each end of rope at a 45-degree angle and secure to ground anchors at each side of the tail.
(6) After 30 days, the aircraft should be flown for 30 minutes or run engines on the ground until oil temperatures reach operating temperatures.

NOTE

Excessive ground operation is to be avoided so that maximum cylinder head temperatures are not exceeded.

SECTION VI
OPERATIONAL DATA

The operational data charts on the following pages are presented for two purposes; first, so that you may know what to expect from your airplane under various conditions; and second, to enable you to plan your flights in detail and with reasonable accuracy.

A power setting selected from the range charts usually will be more efficient than a random setting, since it will permit accurate fuel flow settings and your fuel consumption can be estimated closely. You will find that using the charts and your Cessna 310 Power Computer will pay dividends in over-all efficiency.

The data in the charts has been compiled from actual flight tests with the airplane and engines in good condition, and using average piloting techniques. Note also that the range charts make no allowances for wind, navigational errors, warm-up, take-off, climb, etc. You must estimate these variables for yourself and make allowances accordingly.

DETERMINATION OF RANGE AND ENDURANCE WITH WING LOCKER FUEL SYSTEM

Increases in range and endurance with wing locker tanks can be determined from the cruise performance charts, see Figure 6-10, by using 4/3 of the same increment of increase that is gained from the auxiliary tanks over the standard tanks. If only one wing locker tank is installed, use 2/3 of the increment of increase that is gained from the auxiliary tanks over the standard tanks.

AIRSPEED CORRECTION TABLE

Flaps 0°		Flaps 15°*		Flaps 35° **	
IAS, MPH	CAS, MPH	IAS, MPH	CAS, MPH	IAS, MPH	CAS, MPH
80	78	80	78	70	68
100	98	90	88	80	78
120	118	100	98	90	88
140	138	110	108	100	98
160	158	120	118	110	107
180	177	130	128	120	117
200	197	140	138	130	127
220	216	150	148	140	137
240	235	160	158		
		170	168		
		180	177		

* Maximum Flap Speed 180 MPH (15°) ** Maximum Flap Speed 140 MPH (35°)

Figure 6-1.

STALL SPEED CHART

MPH

5200 POUNDS GROSS WEIGHT, IDLE POWER

CONFIGURATION	ANGLE OF BANK							
	0°		20°		40°		60°	
	IAS	CAS	IAS	CAS	IAS	CAS	IAS	CAS
Gear and Flaps Up	84	82	87	85	96	94	117	116
Gear Down and Flaps 15°	79	77	82	80	90	88	111	109
Gear Down and Flaps 35°	75	73	77	75	85	83	105	103

Figure 6-2.

NORMAL TAKEOFF DISTANCE

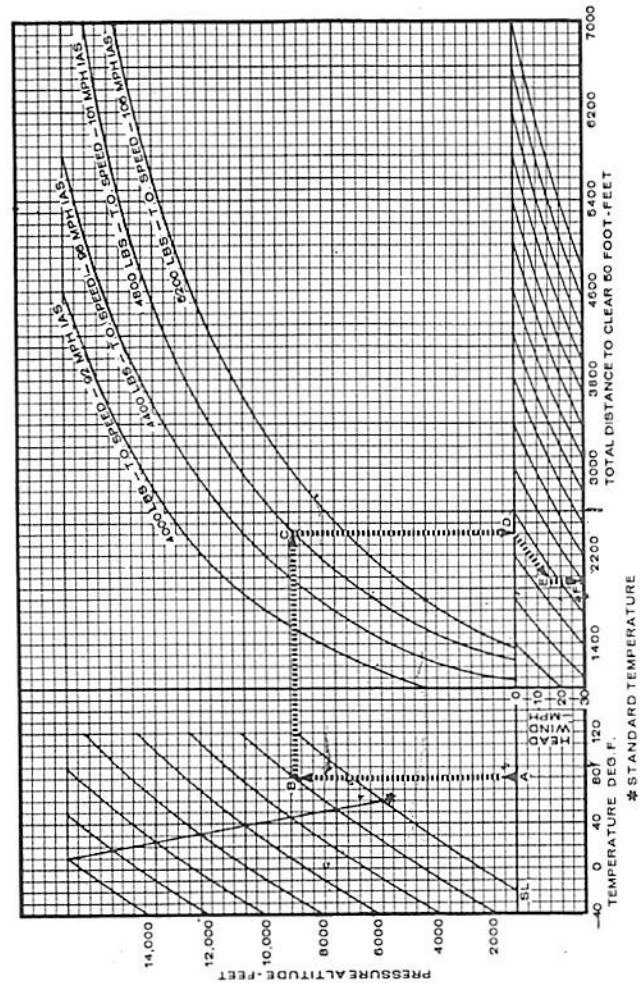

EXAMPLE:

A. Temperature - 80° F.
B. Pressure Altitude - 2000 Ft.
C. Gross Weight - 4800 Lbs.
D. Total Distance to Clear 50 Ft. (No Wind) - 2410 Ft.
E. Headwind - 15 MPH.
F. Total Distance to Clear 50 Ft. (15 MPH Headwind) - 1960 Ft.

CONDITIONS:

1. Level Hard Surface Runway.
2. Wing Flaps UP.
3. Full Throttle and 2625 RPM Before Releasing Brakes.
4. Mixture at Recommended Fuel Flow.
5. Maintain Speed to 50 Feet.

NOTE: Ground Run Is 80% of Total Distance.

Figure 6-3.

ACCELERATE STOP DISTANCE

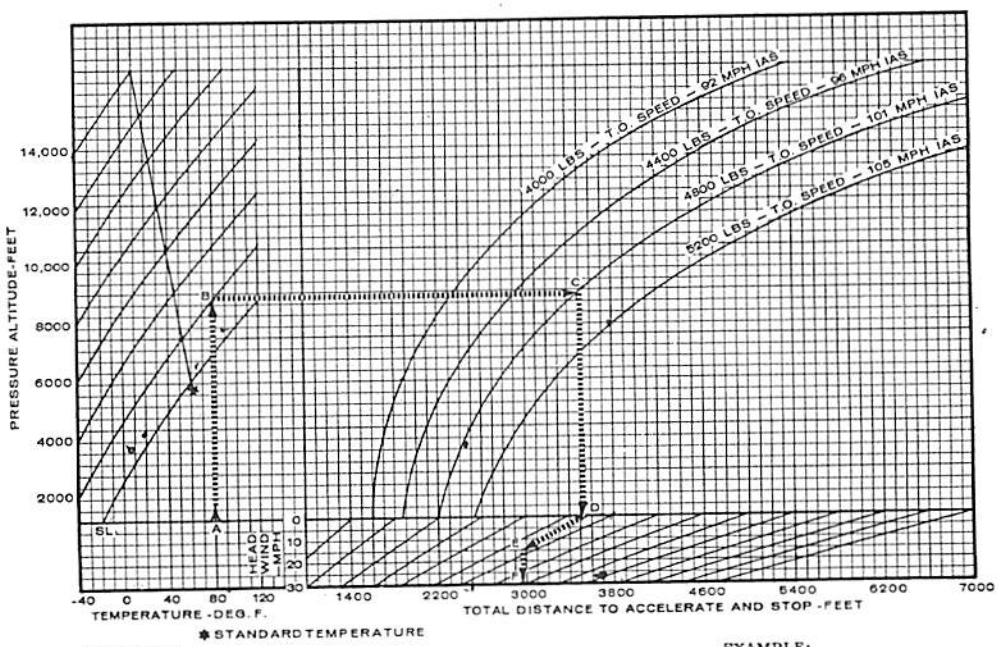

CONDITIONS:

1. Level Hard Surface Runway.
2. Wing Flaps UP.
3. Full Throttle and 2625 RPM Before Releasing Brakes.
4. Mixture at Recommended Fuel Flow.
5. Engine Failure at Takeoff Speed.
6. Heavy Braking After Engine Failure.

NOTE: Accelerating Distance is Approximately 59% of the Total Distance.

EXAMPLE:

A. Temperature - 80°F.
B. Pressure Altitude - 2000 Ft.
C. Gross Weight - 4800 Lbs.
D. Total Distance to Stop (No Wind) - 3525 Ft.
E. Headwind - 15 MPH.
F. Total Distance to Stop (15 MPH Headwind) - 2960 Ft.

Figure 6-4.

SINGLE ENGINE TAKEOFF DISTANCE

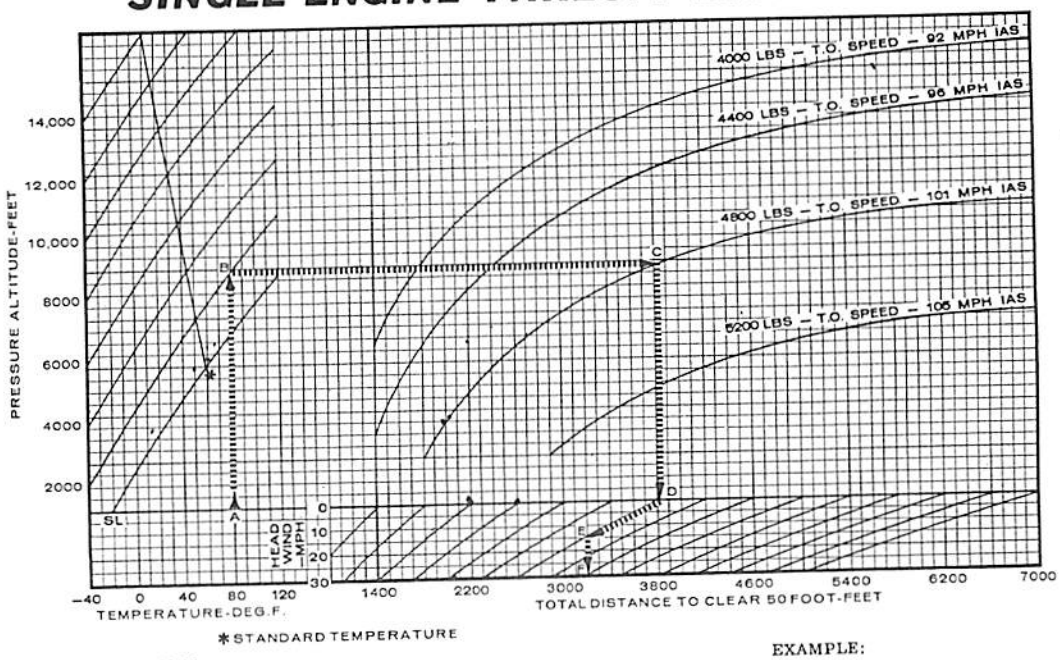

CONDITIONS:

1. Level Hard Surface Runway.
2. Wing Flaps UP.
3. Full Throttle and 2625 RPM Before Releasing Brakes.
4. Mixture at Recommended Fuel Flow.
5. Engine Failure at Takeoff Speed.
6. Propeller Feathered and Gear Retracted During Climb.
7. Maintain Speed to 50 Feet.

EXAMPLE:

A. Temperature - 80°F.
B. Pressure Altitude - 2000 Ft.
C. Gross Weight - 4800 Lbs.
D. Total Distance to Clear 50 Ft. (No Wind) - 3830 Ft.
E. Headwind - 15 MPH.
F. Total Distance to Clear 50 Ft. (15 MPH Headwind) - 3200 Ft.

Figure 6-5.

TWIN ENGINE CLIMB DATA AT 5200 POUNDS

MAXIMUM PERFORMANCE

SEA LEVEL 59°F			5000 FT. 41°F			10000 FT. 23°F			15000 FT. 5°F			20000 FT. -12°F		
Best Climb IAS MPH	Rate of Climb Ft/Min	Gal of Fuel Used	Best Climb IAS MPH	Rate of Climb Ft/Min	From S.L. Fuel Used	Best Climb IAS MPH	Rate of Climb Ft/Min	From S.L. Fuel Used	Best Climb IAS MPH	Rate of Climb Ft/Min	From S.L. Fuel Used	Best Climb IAS MPH	Rate of Climb Ft/Min	From S.L. Fuel Used
125	1542	4	123	1178	6.3	122	818	9.0	121	458	12.7	120	93	20.5

NOTE: FULL THROTTLE, 2625 RPM, MIXTURE AT RECOMMENDED FUEL FLOW, FLAPS AND GEAR UP. FUEL USED INCLUDES WARM-UP AND TAKEOFF ALLOWANCE

Figure 6-6.

CRUISE CLIMB

2450 RPM, 24" MP to 5000 FT. FULL THROTTLE AFTERWARDS

POWER SETTING		Climb IAS MPH	5000 FT. 41°F FROM SEA LEVEL			10000 FT. 23°F FROM SEA LEVEL			15000 FT. 5°F FROM SEA LEVEL		
RPM	M.P.		Dist. Miles	Time Min.	Fuel Used Gal.	Dist. Miles	Time Min.	Fuel Used Gal.	Dist. Miles	Time Min.	Fuel Used Gal.
2450	24	140 / 122	11.0	4.8	6.5	25.9	11.3	9.7	56.4	24.7	15.0

NOTE: WARM-UP AND TAKEOFF ALLOWANCE 4 GALLONS AT SEA LEVEL. MIXTURE AT RECOMMENDED FUEL FLOW, FLAPS AND GEAR UP.

MAXIMUM PERFORMANCE TAKEOFF 15° FLAPS

Gross Weight Pounds	IAS at Takeoff MPH	IAS at Obstacle MPH	Head Wind MPH	DENSITY ALTITUDE SEA LEVEL Ground Run	SEA LEVEL Total Distance over 50 Ft Obstacle	2500 FT. Ground Run	2500 FT. Total Distance over 50 Ft Obstacle	5000 FT. Ground Run	5000 FT. Total Distance over 50 Ft Obstacle	7500 FT. Ground Run	7500 FT. Total Distance over 50 Ft Obstacle
5200	93	93	0	1451	1716	1808	2119	2340	2711	3061	3509
			15	1120	1345	1410	1676	1842	2162	2435	2823
			30	824	1009	1050	1272	1392	1660	1864	2193

Figure 6-7.

SINGLE ENGINE CLIMB DATA

Gross Weight Pounds	SEA LEVEL 59°F Best Climb IAS MPH	SEA LEVEL 59°F Rate of Climb Ft/Min	2500 FT 50°F Best Climb IAS MPH	2500 FT 50°F Rate of Climb Ft/Min	5000 FT 41°F Best Climb IAS MPH	5000 FT 41°F Rate of Climb Ft/Min	7500 FT 32°F Best Climb IAS MPH	7500 FT 32°F Rate of Climb Ft/Min	10000 FT 23°F Best Climb IAS MPH	10000 FT 23°F Rate of Climb Ft/Min
4400	114	534	113	420	111	303	110	188	108	72
4800	117	433	115.5	325	114	215	112	106	111	-5
5200	119	330	117	227	116	125	114	22	113	-80

NOTE: Flaps and gear up, inoperative propeller-feathered, wing banked 5° toward operating engine, full throttle, 2625 RPM and mixture at recommended leaning schedule. Decrease rate of climb 10 FT/MIN for each 10°F above standard temperature for particular altitude.

Figure 6-8.

INDICATED ENROUTE TERRAIN CLEARANCE ALTITUDES

BEST CLIMB SPEED APPROXIMATELY 120 MPH IAS

Gross Weight Pounds	OUTSIDE AIR TEMPERATURE °F -10	0	10	20	30	40	50
	ALTITUDE-FEET						
5200	8600	8100	7500	6800	6300	5700	5250
4800	10200	9600	9100	8500	7900	7300	6800
4400	11500	10900	10300	9750	9200	8700	8100

NOTE: The terrain clearance altitude as defined by FAR 121.181 is the highest ground elevation that can be cleared by 1000 feet on single engine with rate-of-climb of 50 ft/min.

Increase indicated enroute terrain clearance altitudes 100 feet for each 0.10 inch Hg. altimeter setting greater than 29.92 for new indicated altitudes.

Decrease indicated enroute terrain clearance altitudes 100 feet for each 0.10 inch Hg. altimeter setting less than 29.92 for new indicated altitudes.

Figure 6-9.

CRUISE PERFORMANCE WITH NORMAL LEAN MIXTURE AT 2,500 FT.

RPM	MP	% BHP	TAS	Total Gals./Hr.	Endurance 100 Gals.	Range 100 Gals.	Endurance 130 Gals.	Range 130 Gals.
2450	24	74	210	28.0	3.6	750	4.6	974
	23	70	204	26.3	3.8	775	4.9	1008
	22	66	198	24.5	4.1	808	5.3	1051
	21	62	193	23.2	4.3	833	5.6	1081
2300	24	68	202	25.5	3.9	789	5.1	1029
	23	64	196	23.8	4.2	823	5.5	1069
	22	60	190	22.5	4.4	836	5.8	1097
	21	56	184	21.2	4.7	869	6.1	1127
2200	23	58	187	21.8	4.6	858	6.0	1113
	22	55	182	20.7	4.8	878	6.3	1141
	21	50	175	19.3	5.2	907	6.7	1176
	20	47	169	18.3	5.5	923	7.1	1199
2100	22	49	172	18.8	5.3	915	6.9	1190
	21	46	166	17.8	5.6	933	7.3	1212
	20	43	158	16.8	5.9	941	7.7	1222
	19	40	151	16.2	6.2	932	8.0	1212
	18	37	140	15.0	6.7	932	8.7	1212

CRUISE PERFORMANCE IS BASED ON STANDARD CONDITIONS, ZERO WIND, NORMAL LEAN MIXTURE, 100 AND 130 GALLONS OF FUEL (NO RESERVE), AND 5200 POUNDS GROSS WEIGHT.

CRUISE PERFORMANCE WITH NORMAL LEAN MIXTURE AT 5,000 FT.

RPM	MP	% BHP	TAS	Total Gals./Hr.	Endurance 100 Gals.	Range 100 Gals.	Endurance 130 Gals.	Range 130 Gals.
2450	24	77	218	29.0	3.4	752	4.5	976
	23	73	212	27.3	3.7	777	4.8	1009
	22	68	208	25.7	3.9	809	5.1	1052
	21	64	202	24.2	4.1	834	5.4	1085
2300	24	70	208	26.2	3.8	797	5.0	1033
	23	66	204	24.7	4.0	825	5.3	1073
	22	62	197	23.2	4.3	851	5.6	1105
	21	58	192	21.8	4.6	877	6.0	1143
2200	23	61	196	22.7	4.4	866	5.7	1122
	22	57	189	21.3	4.7	886	6.1	1152
	21	53	184	20.2	5.0	914	6.5	1188
	20	50	177	19.2	5.2	924	6.8	1199
2100	22	51	180	19.7	5.1	914	6.6	1188
	21	48	173	18.5	5.4	934	7.1	1216
	20	45	167	17.7	5.7	943	7.3	1223
	19	42	157	16.5	6.1	951	7.9	1235
	18	39	148	15.7	6.4	943	8.3	1223

CRUISE PERFORMANCE IS BASED ON STANDARD CONDITIONS, ZERO WIND, NORMAL LEAN MIXTURE, 100 AND 130 GALLONS OF FUEL (NO RESERVE), AND 5200 POUNDS GROSS WEIGHT.

Figure 6-10. (Sheet 1 of 3)

CRUISE PERFORMANCE WITH NORMAL LEAN MIXTURE AT 7,500 FT.

RPM	MP	%BHP	TAS	Total Gals./Hr.	Endurance 100 Gals.	Range 100 Gals.	Endurance 130 Gals.	Range 130 Gals.
2450	22	71	214	26.5	3.8	807	4.9	1050
	21	67	209	25.0	4.0	837	5.2	1086
	20	63	203	23.5	4.3	865	5.5	1121
	19	58	196	22.0	4.5	891	5.9	1158
2300	22	64	204	24.0	4.2	852	5.4	1107
	21	60	199	22.7	4.4	878	5.7	1139
	20	56	192	21.2	4.7	907	6.0	1178
	19	53	186	20.2	4.9	921	6.4	1197
2200	22	58	196	22.0	4.5	891	5.9	1158
	21	55	191	21.0	4.8	910	6.2	1180
	20	52	185	19.8	5.1	934	6.6	1214
	19	48	177	18.7	5.4	947	6.9	1231
2100	21	50	181	19.2	5.2	944	6.8	1227
	20	47	175	18.3	5.5	957	7.1	1242
	19	44	166	16.8	5.9	988	7.7	1282
	18	40	155	16.2	6.2	958	8.1	1246
	17	37	132	15.3	6.5	862	8.5	1122

CRUISE PERFORMANCE IS BASED ON STANDARD CONDITIONS, ZERO WIND, NORMAL LEAN MIXTURE, 100 AND 130 GALLONS OF FUEL (NO RESERVE), AND 5200 POUNDS GROSS WEIGHT.

CRUISE PERFORMANCE WITH NORMAL LEAN MIXTURE AT 10,000 FT.

RPM	MP	% BHP	TAS	Total Gals./Hr.	Endurance 100 Gals.	Range 100 Gals.	Endurance 130 Gals.	Range 130 Gals.
2450	20	65	211	24.4	4.1	865	5.3	1122
	19	61	204	22.8	4.4	892	5.7	1162
	18	57	197	21.5	4.7	915	6.1	1191
	17	53	189	20.0	5.0	945	6.5	1228
2300	20	59	201	22.0	4.5	913	5.9	1188
	19	55	194	20.8	4.8	931	6.2	1208
	18	51	186	19.7	5.1	944	6.6	1228
	17	48	179	18.5	5.4	966	7.0	1258
2200	20	54	191	20.5	4.9	932	6.3	1210
	19	50	185	19.3	5.2	958	6.7	1247
	18	47	176	18.2	5.5	967	7.1	1258
	17	44	167	17.3	5.8	964	7.5	1255
2100	20	49	181	18.8	5.3	963	6.9	1251
	19	46	172	17.8	5.6	967	7.3	1256
	18	43	163	16.8	5.9	970	7.8	1262
	17	40	146	16.0	6.3	913	8.1	1186

CRUISE PERFORMANCE IS BASED ON STANDARD CONDITIONS, ZERO WIND, NORMAL LEAN MIXTURE, 100 AND 130 GALLONS OF FUEL (NO RESERVE), AND 5200 POUNDS GROSS WEIGHT.

Figure 6-10. (Sheet 2 of 3)

CRUISE PERFORMANCE WITH NORMAL LEAN MIXTURE AT 15,000 FT.								
RPM	MP	% BHP	TAS	Total Gals./Hr.	Endurance 100 Gals.	Range 100 Gals.	Endurance 130 Gals.	Range 130 Gals.
2450	16	53	196	20.2	5.0	972	6.5	1263
	15	48	183	18.7	5.4	979	7.0	1273
	14	44	168	17.3	5.8	972	7.5	1263
2300	16	48	183	18.7	5.4	979	7.0	1273
	15	44	165	17.3	5.8	952	7.5	1240
2200	16	44	168	17.3	5.8	972	7.5	1263

CRUISE PERFORMANCE IS BASED ON STANDARD CONDITIONS, ZERO WIND, NORMAL LEAN MIXTURE, 100 AND 130 GALLONS OF FUEL (NO RESERVE), AND 5200 POUNDS GROSS WEIGHT.

CRUISE PERFORMANCE WITH NORMAL LEAN MIXTURE AT 20,000 FT.								
RPM	MP	% BHP	TAS	Total Gals./Hr.	Endurance 100 Gals.	Range 100 Gals.	Endurance 130 Gals.	Range 130 Gals.
2450	13.5	46	171	18.0	5.6	949	7.22	1233

CRUISE PERFORMANCE IS BASED ON STANDARD CONDITIONS, ZERO WIND, NORMAL LEAN MIXTURE, 100 AND 130 GALLONS OF FUEL (NO RESERVE), AND 5200 POUNDS GROSS WEIGHT.

Figure 6-10. (Sheet 3 of 3)

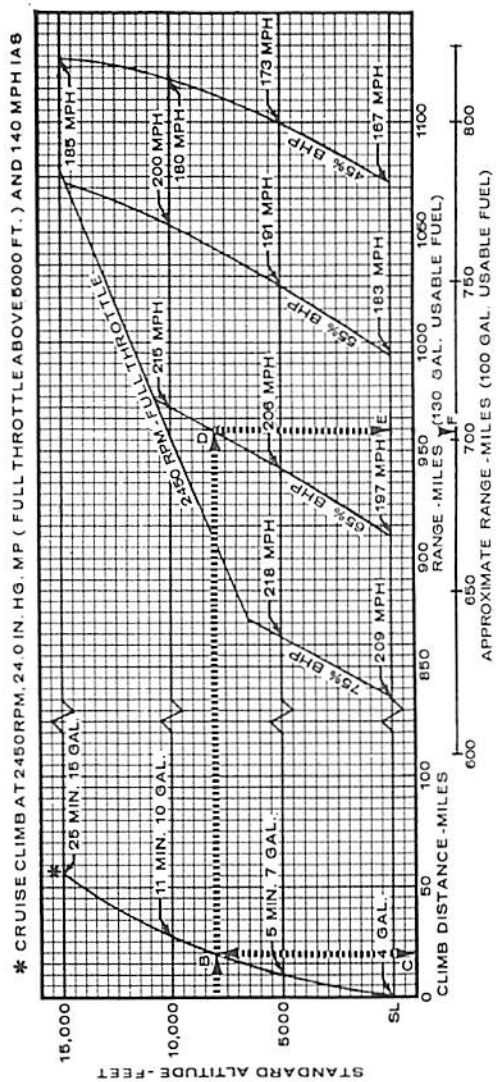

NOTES:

1. Maximum range is not changed appreciably with variations in climb power setting and climb speed.
2. Range includes distance to alternate destination.

CONDITIONS:

1. Starting Weight - 5200 Lbs.
2. Cruise Climb to Desired Cruise Altitude.
3. Cruise Fuel Flow Normal Lean Mixture.
4. Zero Wind.
5. 45 Min. Reserve Fuel (13 Gal) at 45% BHP.

EXAMPLE:

A. Cruising Altitude - 8000 Ft.
B. Time and Fuel Used to Climb from Sea Level to 8000 Ft. - 8.5 Min. and 9 Gal.
C. Climb Distance - 18 Miles.
D. Cruise Power and Speed - 65% and 211 MPH TAS.
E. Range - 959 Mi. (130 Gals. Usable Fuel - Optional).
F. Range - 704 Mi. (100 Gals. Usable Fuel - Standard).

Figure 6-11.

LANDING PERFORMANCE

Gross Weight Pounds	IAS at Obstacle MPH	SEA LEVEL 59° F		2500 FT. 50° F		5000 FT. 41° F		7500 FT. 32° F	
		Ground Run	Total Distance Over 50 Foot Obstacle	Ground Run	Total Distance Over 50 Foot Obstacle	Ground Run	Total Distance Over 50 Foot Obstacle	Ground Run	Total Distance Over 50 Foot Obstacle
4400	97	693	1276	748	1327	806	1385	872	1448
4800	101	840	1420	902	1483	973	1552	1052	1632
5200	105	1002	1582	1077	1631	1160	1743	1254	1842

NOTE: WING FLAPS 35°, POWER OFF, HARD SURFACE RUNWAY, ZERO WIND, MAXIMUM BRAKING EFFORT. REDUCE LANDING DISTANCE 10% FOR EACH 10 MPH HEADWIND.

Figure 6-12.

SECTION VII
OPTIONAL SYSTEMS

This section contains a description, operating procedures, and performance data (when applicable) for some of the optional equipment which may be installed in your Cessna Model 310. Contact your Cessna Dealer for a complete list of available Cessna Model 310 Optional Equipment.

AUXILIARY FUEL SYSTEM.

Auxiliary tanks (15 gal. usable each wing) are installed in each wing just outboard of each engine nacelle and feed directly to the fuel selector valves. Fuel vapor and excess fuel from the engines are returned to the main fuel tanks.

When the selector valve handles are in the "AUXILIARY" position, the left auxiliary tank feeds the left engine and the right auxiliary tank feeds the right engine. If the auxiliary tanks are to be used, select fuel from the main tanks for 60 minutes prior to switching to auxiliary tanks. This is necessary to provide space in the main tanks for vapor and fuel returned from the engine-driven fuel pumps when operating on auxiliary tanks. If sufficient space is not available in the main tanks for this diverted fuel, the tanks may overflow through the vent line. Since part of the fuel from the auxiliary tanks is diverted back to the main tanks instead of being consumed by the engines these tanks will run dry sooner than may be anticipated. However, the main tank endurance will be increased by the returned fuel. Since the auxiliary fuel tanks are designed for cruising flight, they are not equipped with pumps and operation near the ground (below 1000 feet) using auxiliary fuel tanks is not recommended because of this limitation.

OXYGEN SYSTEM.

The oxygen system is designed to provide adequate oxygen flow rates for altitudes up to 30, 000 feet. The system is calibrated for two different altitude ranges, which are: 10, 000 to 22, 000 feet and 22, 000 to 30, 000 feet. Selection of the desired altitude range is accomplished by appropriate selection of color coded hose assemblies. See figure 7-1 for oxygen consumption.

NOTE

The pilot should always select the red hose assembly.

OXYGEN SYSTEM OPERATION.

BEFORE FLIGHT:

(1) Oxygen Knob -- PULL ON.
(2) Oxygen Pressure Gauge -- Check for sufficient pressure for anticipated requirements of flight. (See figure 7-1.)
(3) Check that oxygen masks and hose assemblies are available.

OXYGEN CONSUMPTION RATE CHART

ALTITUDE RANGE-FEET	10,000 22,000	22,000 30,000
HOSE ASSEMBLY COLOR	ORANGE	RED
CONSUMPTION PSI/HR.	197	308

OXYGEN DURATION CALCULATION :

Total Oxygen Duration (Hours) = oxygen pressure indicator reading ÷ [oxygen consumption (PSI/HR) × number of passengers + pilot consumption rate]

EXAMPLE: (48.3 cu. ft. capacity) (1800 psi, oxygen pressure indicator reading)

1. Planned Flight - Pilot and 3 passengers at 20,000 feet.
2. From Chart - At 20,000 feet altitude, passenger flow rate is 197 PSI/HR. and the pilot flow rate is 308 PSI/HR.
3. Oxygen Duration = 1800 ÷ (3 × 197+308) = 2.0 hours.

Figure 7-1

DURING FLIGHT:

WARNING

Permit no smoking when using oxygen. Oil, grease, soap, lipstick, lip balm, and other fatty materials constitute a serious fire hazard when in contact with oxygen. Be sure hands and clothing are oil-free before handling oxygen equipment.

(1) Hose Assembly -- Select proper hose assembly for altitude.
(2) Mask -- Connect mask and hose assembly and put mask on.
(3) Hose Coupling -- Plug into overhead console.
(4) Oxygen Flow Indication -- Check flow. (Ball toward mask indicates proper flow.)
(5) Disconnect hose coupling from console when not in use.

OXYGEN SYSTEM SERVICING.

The oxygen cylinder, when fully charged, contains approximately 48.3 cubic feet of oxygen, under a pressure of 1800 psi at 70° F. Filling pressures will vary, however, due to the ambient temperature in the filling area, and because of the temperature rise resulting from compression of the oxygen. Because of this, merely filling to 1800 psi will not result in a properly filled cylinder. Fill to the pressures indicated in figure 7-2 for the ambient temperature.

AMBIENT TEMPERATURE °F	FILLING PRESSURE PSIG	AMBIENT TEMPERATURE °F	FILLING PRESSURE PSIG
0	1600	70	1925
10	1650	80	1950
20	1675	90	2000
30	1725	100	2050
40	1775	110	2100
50	1825	120	2150
60	1875	130	2200

Example - If ambient temperature is 70° F, fill oxygen cylinder to approximately 1925 psi - as close to this pressure as the gauge may be read. Upon cooling, cylinder should have approximately 1800 psi pressure.

Figure 7-2

IMPORTANT

Oil, grease, or other lubricants in contact with oxygen create a serious fire hazard, and such contact must be avoided when handling oxygen equipment.

The cylinder is serviced through an external filler valve located just above the aft end of the nosewheel doors. The Servicing Requirements table, located on the inside back cover of the manual, lists the correct type of oxygen for refilling the cylinder.

The face masks used with the oxygen system are the partial-rebreathing type. The pilot's mask is a permanent type mask, while the remainder are the disposable type. A frequent user can mark and reuse his disposable type mask many times. Additional masks and hoses are available from your Cessna Dealer.

COLD WEATHER EQUIPMENT.

OIL DILUTION SYSTEM.

If your airplane is equipped with an optional oil dilution system and very low temperatures are expected, dilute oil in each engine before stopping the engines. With the engines operating at 1000 RPM and the auxiliary fuel pumps in the ON position, hold the oil dilution switch to the L or R position. Refer to figure 7-3, Oil Dilution Table.

While diluting the engine oil, watch the oil pressure for any fluctuations that might indicate a filter or screen being clogged with sludge washed down by the fuel.

NOTE

On the first operation of the oil dilution system each season, use the full dilution period, drain the oil in each engine, change the filters or clean the screens, refill with new oil and redilute as required.

If the full dilution time was used, beginning with a full oil sump (12 quarts), subsequent starts and engine warm-up should be prolonged to evaporate enough of the fuel to lower the oil sump level to 12 quarts prior to takeoff. Otherwise, the sumps may overflow when the airplane is nosed-up for climb.

To avoid progressive dilution of the oil, flights of at least one hour's duration should be made between oil dilution operations.

OIL DILUTION TABLE			
	TEMPERATURE		
	0° F	-10° F	-20° F
Dilution Time	20 sec.	50 sec.	80 sec.
Fuel Added	1 qt.	2.5 qt.	4 qt.
MAXIMUM SUMP CAPACITY——16 qt.			
MAXIMUM FOR TAKEOFF——13 qt.			

Figure 7-3.

PROPELLER DEICE SYSTEM.

The propeller deice system consists of electrically heated boots on the propeller blades. Each boot consists of two heating elements "Outboard" and "Inboard", which receive their electrical power through a deice timer. To reduce power drain and maintain propeller balance, the timer directs current to the propeller boots in cycles between boot elements and between propellers.

NORMAL OPERATION.

To operate the propeller deice system proceed as follows:

(1) Battery Switch -- ON.
(2) Propeller Deice Circuit Breaker -- Check in.
(3) Propeller Deice Switch -- ON (up position).
(4) Ammeter -- Check.

NOTE

Periodic fluctuation (7 to 12 Amps.) of the propeller deice ammeter pointer indicates normal operation of the deicing elements of first one propeller and then the other.

NOTE

To check all the heating elements of both propellers and the deice timer for normal operation, the system must be left ON for approximately two to two and one-half minutes.

The timer directs current to the propeller boots in cycles between boot elements and between propellers in the following cycling sequence:

Heating Period No. 1 - Outboard halves - right engine blades.
Heating Period No. 2 - Inboard halves - right engine blades.
Heating Period No. 3 - Outboard halves - left engine blades.
Heating Period No. 4 - Inboard halves - left engine blades.

Each heating period lasts for approximately one-half minute.

EMERGENCY OPERATION.

Abnormal operation of the propeller deice system is indicated by the circuit breaker on the circuit breaker panel opening the circuit. Failure of the circuit breaker to stay reset indicates that deicing is impossible for the propellers.

A reading below 7 amperes on the propeller deice ammeter indicates that the blades of the propeller are not being deiced uniformly.

WARNING

When uneven deicing of the propeller blades is indicated, it is imperative that the deicing system be turned OFF. Uneven deicing of the blades can result in propeller unbalance and engine failure.

DEICING SYSTEM.

OPERATING CHECKLIST.

BEFORE ENTERING AIRPLANE:

(1) During the exterior inspection, check the boots for tears, abrasions, and cleanliness. Have boots cleaned and any major damage repaired before takeoff.

DURING ENGINE RUNUP:

(1) Position deicer switch to ACTUATE and check inflation and deflation cycle. The pressure indicator light (green in color) should light when the system reaches 10 PSI. The system may be recycled as soon as the light goes OFF, or as required.

NOTE

The deicer system is manually controlled. Every time a deicing cycle is desired, the switch must be positioned to ACTUATE. The switch will instantly spring back to OFF, but a 6 second delay action in the timing relay will complete the deicing inflation cycle.

(2) Check boots visually for complete deflation to the vacuum hold-down position.

NOTE

Complete inflation and deflation cycle will last approximately 30 seconds.

IN FLIGHT.

(1) When ice has accumulated to approximately 1/2 inch thick on the leading edges, position deicer switch to ACTUATE.

AFTER LANDING.

(1) Check boots for damage and cleanliness. Remove any accumulations of engine oil or grease.

OPERATING DETAILS.

Cycling the deice boots produces no adverse aerodynamic effects in any attitude within the allowable flight limitations.

Deice boots are intended to remove ice after it has accumulated rather than preventing its formation. If the rate of ice accumulation is slow, best results can be obtained by leaving the deice system OFF until 1/4 to 3/4 inch of ice has accumulated. After clearing this accumulation with one or two cycles of operation, the system should remain OFF until a significant quantity of ice has again accumulated. Rapid cycling of the

system is not recommended, as this may cause the ice to grow outside the contour of the inflated boots, preventing its removal.

NOTE

Since wing and horizontal stabilizer deicer boots alone do not provide adequate protection for the entire airplane, known icing conditions should be avoided whenever possible. If icing is encountered, close attention should be given to the pitot-static system, propellers, induction systems, and other components subject to icing.

The deice system will operate satisfactorily on either or both engines. During single-engine operation, suction to the gyros will drop momentarily during the boot inflation cycle.

DEICER BOOT CARE.

Deicer boots have a special, electrically-conductive coating to bleed off static charges which cause radio interference and may perforate the boots. Fueling and other servicing operations should be done carefully, to avoid damaging this conductive coat or tearing the boots.

Keep the boots clean and free from oil and grease, which swell the rubber. Wash the boots with mild soap and water, using benzol or unleaded gasoline, if necessary, to remove stubborn grease. Do not scrub the boots and be sure to wipe off all solvent before it dries.

Small tears and abrasions can be repaired temporarily without removing the boots and the conductive coating can be renewed. Your Cessna Dealer has the proper materials and know-how to do this correctly.

PROPELLER SYNCHRONIZER.

The Cessna Propeller Synchronizer matches propeller RPM of the two engines on the airplane. The propeller RPM of the slave (right) engine will follow changes in RPM of the master (left) engine over a limited range. This limited range feature prevents the slave engine losing more than a fixed amount of propeller RPM in case the master engine is feathered with the synchronizer on. The synchronizer switch in the OFF position will automatically actuate the synchronizer to the center of its range before stopping, to insure that the control will function normally when next turned on. The system indicator light should light when the synchronizer switch is in the ON position.

NOTE

- Manually synchronize the RPM of the engines prior to switching the propeller synchronizer system ON.
- The propeller synchronizer must be switched OFF during takeoff, landing and single-engine operation.

ECONOMY MIXTURE INDICATOR.

The Cessna Economy Mixture Indicator is an exhaust gas temperature sensing device which is used to aid the pilot in selecting the most desirabl fuel-air mixture for cruising flight at less than 75% power. Exhaust gas temperature (EGT) varies with the ratio of fuel-to-air mixture entering the engine cylinders.

OPERATING INSTRUCTIONS.

(1) In takeoff and full power climb, lean mixture as indicated by altitude markings on the fuel flow indicator.

NOTE

Leaning in accordance with altitude markings on the fuel flow indicator will provide sufficiently rich mixture for engine cooling. Leaner mixtures are not recommended for climb power settings in excess of 75%.

(2) In level flight (or cruising climb at less than 75% power), lean the mixture to peak EGT, then enrichen as desired using figure 7-4 as a guide.

NOTE

- Changes in altitude, OAT or power settings require the EGT to be rechecked and the mixture reset.
- Operation at peak EGT is not authorized for normal continuous operation, except to establish peak EGT for reference. Operating leaner than peak EGT minus 25° F (enrichen) is not approved.

(3) Use rich mixture (or mixture appropriate for field elevation) in idle descents or landing approaches. Leaning technique for cruise descents may be with EGT reference method (at least every 5000 feet) or by simply enriching to avoid engine roughness, if numerous power reductions are made.

MIXTURE DESCRIPTION	EGT	TAS LOSS FROM BEST POWER	RANGE INCREASE FROM BEST POWER
BEST POWER (Maximum Speed)	Peak Minus 75° (enrichen)	0 MPH	0%
NORMAL LEAN (Owner's Manual & Computer Performance)	Peak Minus 25° (enrichen)	2 MPH	10%

Figure 7-4.

WING LOCKER FUEL SYSTEM

Optional wing locker fuel tanks (20 U. S. Gallons usable on each wing) are installed in the forward portion of the nacelle wing lockers. There are no separate fuel selector controls for the wing locker fuel tanks. The wing locker fuel is pumped directly into the main tanks with a fuel transfer pump. Indicator lights mounted on the instrument panel are illuminated by pressure switches to indicate fuel has been transferred. The wing locker fuel should not be transferred until there is 180 pounds or less in the main fuel tanks to prevent overflow of the main tank fuel. Fuel should be crossfed as required to maintain fuel balance after wing locker fuel has been transferred.

NOTE

Wing locker transfer pump switches provided on the instrument panel, energize the wing locker fuel transfer pumps for transferring fuel. These switches should be turned ON only to transfer fuel when in straight and level flight and turned OFF when the indicator lights come ON indicating fuel has been transferred.

FIRE DETECTION AND EXTINGUISHING SYSTEM

The fire detection and extinguishing system consists of three major components: three heat sensitive detectors located in each engine accessory compartment; an annunciator and actuator panel (see Figure 7-5); and a compressed Freon single shot gas bottle in each engine accessory compartment.

Annunciation		
Legend	Color	Cause of Illumination
Fire	Red	Fire condition existing in engine compartment
E	Amber	Fire extinguisher container empty
OK	Green	Fire cartridge and associated wiring is in operational condition

Figure 7-5

A test function is provided to test the system circuitry. When the test switch is pushed all lights should illuminate, if any light fails to illuminate replace the bulb. If the green light does not illuminate after replacing the bulb, replace firing cartridge in fire extinguisher. Any other light failure, after replacing bulbs and firing cartridge, indicates malfunction in unit or associated wiring.

If an overheat condition is detected, the appropriate FIRE light will annunciate the engine to be extinguished. To activate the extinguisher, open the guard for the appropriate engine and press the FIRE light. Freon, under pressure, will be discharged to the engine and engine accessory compartments. The amber light E (Figure 7-5) will illuminate after the extinguisher has been discharged and will continue to show empty until a new bottle is installed. The FIRE light will remain illuminated until compartment temperatures cool.

OPERATING CHECKLIST

NORMAL

Before Takeoff

(1) Press the test switch - all lights should illuminate.

EMERGENCY

If a fire warning light indicates an engine compartment fire and is confirmed or if a fire is observed without a fire warning light:

(1) Shut down the appropriate engine as follows:
- (a) Mixture control - IDLE CUT-OFF.
- (b) Propeller - FEATHER.
- (c) Magnetos - OFF.
- (d) Fuel selector - OFF.
- (e) Cowl flaps - CLOSED.

(2) Open the appropriate guard and push FIRE light.

(3) Land as soon as practical.

NOTE

Better results may be obtained if the airflow through the nacelle is reduced by slowing the aircraft (as slow as practical) prior to actuating the extinguisher.

SERVICING

The system should be checked each 100 hours or annual inspection, whichever occurs first.

Check the pressure gage on each bottle to ensure the following pressures:

PRESSURE TEMPERATURE CORRECTION TABLE										
Temp F°	-60	-40	-20	0	+20	+40	+60	+80	+100	+120
Gage	110	127	148	174	207	249	304	367	442	532
Actual	134	155	180	212	251	299	354	417	492	582

If these pressures are not indicated, have the bottle serviced.

ALPHABETICAL INDEX

Page

A

Accelerate Stop Distance . . 6-4
After Landing 1-6, 7-7
Airspeed Correction Table. . 6-2
Airplane File 5-5
Airspeed Indicator Instrument Markings 4-2
Airspeed Limitations (CAS) . 4-1
Airspeed Nomenclature, Single-Engine 3-2
Alternate Induction Air System 2-9
Alternate-Source Valve, Static-Pressure 2-5
Approach and Landing, Single-Engine 3-7
Authorized Operations . . . 4-1
Auxiliary Fuel Pump Switches 2-1
Auxiliary Fuel System . . . 7-1

B

Balance, Weight and . . . 4-3
Battery and Generator Switches. 2-3
Before Landing 1-5
Before Starting Engines . . 1-1
Before Takeoff . . . 1-2, 2-7
Breakers, Circuit 2-3

C

Care of the Airplane . . . 5-1
Center of Gravity Moment Envelope 4-6
Charts
- Accelerate Stop Distance . 6-4
- Airspeed Correction . . 6-2
- Center of Gravity Moment Envelope 4-6
- Cruise Performance 6-8, 6-9, 6-10
- Indicated Enroute Clearance Altitudes 6-7
- Landing Performance . . 6-12
- Loading 4-5
- Maximum Glide 3-8
- Maximum Performance Takeoff 6-7
- Normal Takeoff Distance . 6-3
- Oil Dilution 7-5
- Oxygen Consumption Rate . 7-2
- Propeller RPM for Zero Thrust 3-6
- Range Profile 6-11
- Sample Problem 4-4
- Single-Engine
  - Airspeed Nomenclature 3-2
  - Climb Data 6-7
  - Takeoff 3-3
  - Takeoff Distance . . . 6-5
- Stall Speed 6-2
- Twin-Engine
  - Climb Data, Maximum Performance . . . 6-6
  - Cruise Climb 6-6

Checklist, Operating . . . 1-1
Circuit Breakers 2-3
Climb 2-8, 6-6
- Cruise 2-8, 6-6
- Maximum Performance .1-4, 6-6
- Normal 1-4

Climb Data Chart, Single-Engine 6-7
Cold Weather Equipment . . 7-4

Deicing System 7-6
Oil Dilution System . . . 7-4
Propeller Deice System . 7-5
Cold Weather Operation . . 2-10
Congratulations i
Contents, Table of iii
Cruise Climb 6-6
Cruise
Performance . 6-8, 6-9, 6-10
Cruising 1-5, 2-8
Cylinder Head Temperature . 4-2

D

Data, Operational 6-1
Deice System, Propeller . . 7-5
Deicer Boot Care 7-8
Deicing System 7-6
Description & Operating Details 2-1
Dilution System, Oil . . . 7-4
Dimensions, Principal . . ii
Ditching 3-13
Drains, Fuel Strainer and
Tank Sump 2-1

E

Economy Mixture Indicator . 7-9
Operating Instructions . . 7-9
Electrical System 2-1
Battery and Generator
Switches 2-3
Circuit Breakers 2-3
Emergency
Procedures 3-1
Landing 3-11
Emergency Procedures,
System 3-9
Engine Instrument Markings . 4-2
Cylinder Head Temperature 4-2
Fuel Flow 4-3
Manifold Pressure . . . 4-2
Oil Pressure 4-2
Oil Temperature 4-2
Tachometer 4-3
Engine-out During Flight . . 3-5
Engine-out Procedure . . . 3-1
After Takeoff 3-1
On Takeoff 3-1
Supplementary Information 3-2
Engine Operation Limitations 4-2
Engine Restarts in Flight . . 3-7
Engine, Starting . . . 1-2, 2-6
Equipment, Cold Weather . . 7-4
Exterior Inspection iv

F

File, Airplane 5-5
Fire Detection and
Extinguishing System . . . 7-11
Flyable Storage 5-7
Follow-up System, Owner . . 5-4
Forced Landing . . . 3-8, 3-9
Fuel Flow Gage 4-3
Fuel System 2-1
Auxiliary 2-1
Auxiliary Fuel Pump Switch
Fuel Strainer and Tank . . 2-1
Sump Drains 2-2
Schematic 7-1
Wing Lockers 7-10

G

Generator Switches,
Battery and 2-3
Glide Chart, Maximum . . . 3-8
Glide, Maximum 3-7
Ground Handling 5-1

H

Handcrank, Landing Gear . . 2-4
Handling, Ground 5-1
Heater System 2-4
Operation for Heating
and Defrosting 2-4
Overheat Warning Light . . 2-5
Used for Ventilation . . . 2-5

I

Indicated Enroute Terrain
Clearance Altitude . . . 6-7
Induction Air System,
Alternate 2-9
Inspection Service and Periods 5-3
Instrument Markings, Engine . 4-2
Cylinder Head Temperature 4-2
Fuel Flow Gage 4-3
Manifold Pressure . . . 4-2
Oil Pressure Gages . . . 4-2
Oil Temperature Gages . . 4-2
Tachometer 4-3
Interior Care 5-3
Intervals Checklist, Servicing 5-6

L

Landing 1-5
Forced 3-8, 3-9
Landing Emergencies
Defective Main Gear . . . 3-12
Defective Nose Gear . . . 3-13
Flat Main Gear Tire . . . 3-11
Flat Nose Gear Tire . . . 3-11
Landing Gear System . . . 2-3
Handcrank 2-4
Position Light 2-3
Warning Horn 2-4
Landing Performance Chart . 6-12
Letdown 1-5
Limitations, Airspeed (CAS) . 4-1
Limitations, Operating . . . 4-1
Loading Chart 4-5
Lockers, Wing 4-3
Lubrication and Servicing
Procedures 5-6

M

Maneuvers, Normal Category 4-1
Manifold Pressure Gage . . 4-2
Maximum Glide 3-7
Maximum Glide Chart . . . 3-8
Maximum Performance
Chart 6-6
Climb 1-4
Takeoff 1-3
Takeoff Chart 6-7
Mixture Indicator, Economy . 7-9
Mooring Your Airplane . . 5-1

N

Normal
Climb 1-4
Distance Chart 6-3
Takeoff 1-3

O

Oil Dilution System 7-4
Oil Pressure Gages . . . 4-2
Oil Temperature Gages . . 4-2
Operating Checklist 1-1
Operational Data 6-1
Operating Limitations . . . 4-1
Operations, Authorized . . 4-1
Optional Systems 7-1
Overheat Warning Light . . 2-5
Owner Follow-up System . . 5-4
Oxygen System 7-1
Consumption Rate Chart . 7-2
Operation 7-2
Servicing 7-3

P

Painted Surfaces 5-2
Performance, Cruise
Chart 6-8, 6-9, 6-10
Pitot Heat Switch 2-5
Position Lights, Landing Gear 2-3
Principal Dimensions . . . ii
Profile Chart, Range . . . 6-11
Propeller Care 5-3
Propeller Deice System . . 7-5
Emergency Operation . . 7-6

Normal Operation . . . 7-5
Propeller RPM for Zero Thrust 3-6
Propeller Synchronizer . . . 7-8

R

Range Profile Chart 6-11
Restarts, Engine in Flight . . 3-7
RPM for Zero Thrust, Propeller 3-6

S

Sample Problem 4-4
Schematic, Fuel System . . 2-2
Secure Airplane 1-6
Servicing Intervals Checklist . 5-6
Servicing Procedures, Lubrication 5-6
Single-Engine
Airspeed Nomenclature . . 3-2
Approach and Landing . . 3-7
Climb Data Chart . . . 6-7
Takeoff Distance Chart . . 6-5
Takeoff Table 3-3
Spins 2-10
Stall 2-10
Stall Speed Chart 6-2
Static-Pressure Alternate-Source Valve 2-5
Starting Engines 1-2, 2-6
Storage, Flyable 5-7
Strainer and Tank Sump Drains, Fuel 2-1
Supplementary Information Concerning Engine-out During Takeoff . . . 3-2
Synchronizer, Propeller . . 7-8
System Emergency Procedures 3-9
Fuel System 3-9
Landing Gear System . . 3-10

T

Table of Contents iii
Tachometer 4-3
Takeoff 1-3, 2-7
Before 1-2, 2-7
Chart, Normal 6-3
Distance, Single-Engine . 6-5
Maximum Performance . 1-3
Takeoff, Single-Engine . . . 3-3
Taxiing 2-6
Temperature, Cylinder Head . 4-2
Temperature, Oil Gage . . . 4-2
Twin Engine
Climb Data 6-6
Cruise Climb 6-6
Maximum Performance . . 6-7

V

Ventilation, Heater Used for . 2-5

W

Warning Horn, Landing Gear . 2-4
Warning Light, Overheat . . 2-5
Weight and Balance 4-3
Windows and Windshield . . 5-2
Wing Lockers 4-3
Fuel System 7-10

Notes .....

WARRANTY

The Cessna Aircraft Company (Cessna) warrants each new aircraft manufactured by it, including factory installed equipment and accessories, and warrants all new aircraft equipment and accessories bearing the name "Cessna," to be free from defects in material and workmanship under normal use and service. Cessna's obligation under this warranty is limited to supplying a part or parts to replace any part or parts which, within six (6) months after delivery of such aircraft or such aircraft equipment or accessories to the original retail purchaser or first user, shall be returned transportation charges prepaid to Cessna at Wichita, Kansas, or such other place as Cessna may designate and which upon examination shall disclose to Cessna's satisfaction to have been thus defective.

The provisions of this warranty shall not apply to any aircraft, equipment or accessories which have been subject to misuse, negligence or accident, or which shall have been repaired or altered outside of Cessna's factory in any way so as in the judgment of Cessna to affect adversely its performance, stability or reliability. This warranty is expressly in lieu of any other warranties, expressed or implied, including any implied warranty of merchantability or fitness for a particular purpose, and of any other obligation or liability on the part of Cessna of any nature whatsoever and Cessna neither assumes nor authorizes any one to assume for it any other obligation or liability in connection with such aircraft, equipment and accessories.

SERVICING REQUIREMENTS

FUEL:

AVIATION GRADE -- 100/130 MINIMUM
CAPACITY EACH MAIN TANK -- 51 GALLONS
CAPACITY EACH AUXILIARY TANK -- 15.5 GALLONS

ENGINE OIL:

AVIATION GRADE -- SAE 30 BELOW 40° F
SAE 50 ABOVE 40° F
AVIATION GRADE STRAIGHT MINERAL OIL FOR THE FIRST 25 HOURS OF OPERATION, THEN DETERGENT OIL, CONFORMING TO CONTINENTAL MOTORS SPEC. MHS-24A CAN THEN BE USED.
CAPACITY EACH ENGINE SUMP -- 12 QUARTS
(DO NOT OPERATE ON LESS THAN 9 QUARTS, FILL TO 10 QUART LEVEL FOR NORMAL FLIGHTS OF LESS THAN 3 HOURS, AND FILL TO CAPACITY IF EXTENDED FLIGHT IS PLANNED. IF OPTIONAL OIL FILTER IS INSTALLED, ONE ADDITIONAL QUART IS REQUIRED WHEN THE FILTER ELEMENT IS CHANGED.)
OPTIONAL OIL FILTER ELEMENT -- CESSNA C294505-0102

HYDRAULIC FLUID: MIL-H-5606 HYDRAULIC FLUID (RED)

OXYGEN:

AVIATOR'S BREATHING OXYGEN -- MIL-O-27210
MAXIMUM PRESSURE -- 1800 PSI

TIRE PRESSURE:

MAIN WHEELS -- 60 PSI
NOSE WHEEL -- 24 PSI

VACUUM AIR FILTER:

ELEMENT -- C294501-0103